Hochschule Osnabrück
University of Applied Sciences

Bachelorarbeit

Fakultät Ingenieurwissenschaften und Informatik

zum Thema

Design and Development of an Electric Taxi

vorgelegt durch

Elena Sardiña del Dedo

Matrikelnummer: 649128

April 2015

Erstprüfer: Prof. Dr.-Ing. C. Schäfers

Zweitprüfer: Prof. Dr.-Ing. N.Austerhoff

TABLE OF CONTENTS

1. SUMMARY 4

2. INTRODUCTION 5

3. MEDELLÍN 6

3.1. Cultural context 6

3.2. Traffic in Medellín 6

3.3. Pollution in Medellín 9

3.4. Electric taxi Bogotá 10

3.5 Normative regarding taxis in Medellín 11

4. ELECTRIC TAXI 12

4.1. Global analysis of energy 12

4.2 Batteries 12

4.3 Temperatures and overpotential 15

4.4. Disposition 16

5. ELECTRICAL MOTOR 19

5.1. Chosen Motor 19

5.2. Distribution 20

5.3. Plugin 21

5.4. Costs 22

5.5. Transmission 25

6. SYSTEMS 26

6.1 Suspension 26

6.2 Antiroll Bar 31

7. WHEELS AND TIRES 32

7.1 Tires 32

7.2. Tubeless.....33

7.3. Wheels 34

8. ADAPTATION FOR DISABLE PEOPLE.....35

9. DESIGN.....49

9.1. Aerodynamic and materials 49

9.2. Taxi driver.....55

9.3. Passengers 59

9.4. Boot.....63

9.5. Door.....64

9.6. Final design and sizes 66

10. POSSIBLE IMPROVEMENTS.....69

10.1. Piezoelectric 69

10.2. Kinetic Energy Recovery System 70

10.3. Smart Grid 72

11. CONCLUSIONS 74

LIST OF FIGURES AND LIST OF TABLES: 76

BIBLIOGRAPHY.....80

1. Summary

This project consists in the development and design of an electrical taxi in Medellín. In following pages we will discern about reasons which we have considered necessary the implementation of our taxi in this region. Thus the first section is regarding cultural-economical setting of Colombia.
Afterward, we are going to focus on electric vehicles in general; pollution, features, advantages, energy and batteries. Electric motor will be thoughtful owing to be the most important element in this sort of vehicle. Mechanical systems such as suspension and antiroll bar are also contemplated in this project.

The inside of the vehicle is which makes this project unconventional. We have designed an inside completely different comparing with standard vehicles to fill specific needs. Thanks the program of design CATIA, related solutions are showed in detail. Explications are more visual by this tool; these afford that the main idea can be observed specifically. In the section of design we find the pertinent to aerodynamic and materials. Social problems have been attempted due to imply one change in design to cover a necessity. Owing to the electric taxi will be develop in Medellín, we should take into account its normative and the afford to obtain certain materials.

Other aspect that makes this project special is the adaptation for disable people. There are few taxis worry for this problem and the fact of improve and develop this extra in our taxi should be kept on mind. The design will be showed also with CATIA to understand it better.
Finally, we will focus on other alternatives and improvements which we should implement. There are great researches in the field of energy and electric vehicles which try to improve these. For this reason, we will talk about kinetic energy recovery system, the possibility of use piezoelectric to earn more electricity and something about Smart Grid.

2. Introduction

It is a fact that we need a change in the world of automobiles. Nowadays the mind of eco-development is growing up, nevertheless is not enough. Besides of environmental advantage, an electric vehicle is a determining solution to allay economic problems. The main aims of this project are the improvement of the economy of Medellín and reduce its enormous problem of pollution.

With this project we will try to minimize two of the most characteristic problems which are sustain by Medellín. The first one is the economic-cultural setting; it means the resources of Medellín, the mind of population regarding electric vehicles, problems with taxi drivers and geography. We should keep on mind that, despite of the taxi is designed in Germany; it will be built in other continent with contrasted resources and, even different anthropometry. We take it into account upon design.

On the other hand, we should not forget the chief limitation of electric vehicles; the autonomy of batteries. To solve these problems, a similar project in Bogotá was made. We will talk about its features and why we decide to do not work over this vehicle. In following sections this bio taxi will be mentioned once in a while.

Thank to this totally newfangled idea, we would like to revolutionize the concept of taxi with regard to distribution. We will not focus just in design, it is just that we will aid to reduce the weight of the car, reduce the energy requirement, improve the aerodynamic and solve other kind of problems that people use to deal when they use a taxi. The first aim of this project was to develop a taxi for more disadvantaged people, nevertheless we have to be realistic and come to terms with our customers could not be included in this social group. In any case, collaborating with the economy of the city, indirectly we are taking part in the upgrade of their life.

3. Medellín

3.1. Cultural context

Medellin is the second most important city in Colombia; there are different social classes in the same city. We tried to design a solution for people less favoured, making the use of taxis cheaper. Unfortunately there is a law which establishes that the price of electrical taxi and conventional taxi would be the same. Despite the fact that consumer's economy will not be changed, this project might help the economy of Medellín in general and, especially the problem with pollution. As we can observe in the Fig.3.1, there is different point of view about poverty depending on zones.

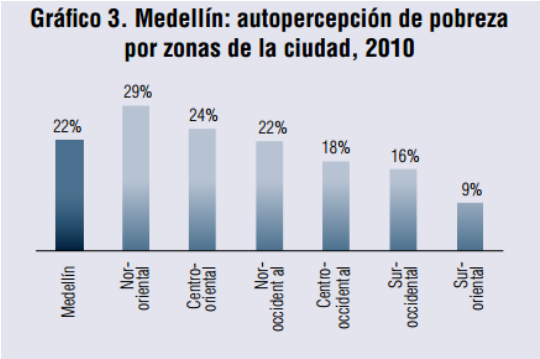

Figure 3.1: Perception of poverty by zones in Medellín. [4.1]

Due to people who have really economic problems can not get taxis; the aim of this project is building a taxi for medium life level people. This taxi is destined to make normal routes in urban zones. These zones connect routes between offices and main worked buildings.

3.2. Traffic in Medellín

The number of vehicles increases year after year. An average of 4.8 million trips a day was found. In August 2010 there were 850,000 vehicles while in 2013 already 1,181,817 vehicles in the Valle de Aburrá were registered, an increase of 35% since 2009.

The general traffic-related mobility grew between 2000 and 2005 by 25%, while there was a growth of 12% in the period 2005-2012. For this reason, the transport infrastructure has to deal with the growing. It is one of the greatest challenges facing the region in the coming years.

Medellín has a pretty low number of trips per person per day (1.7 trips / day and inhabitant) in comparison to other Latin American cities with travel between 2.5 and 4 per person per day.

Almost 90% of people tend to use only one way of transport per route. In 2004 studies of transport showed that the average speed was approximately of 22.1 km / h in rush hour in the morning and 17 km / h during peak hours in the evening. The average travel time on public transport was 35 minutes at a distance of 8.75 km away. The speed of public transports, were between 5 and 26 km / h. The lowest rates were measured in the centre of town (5-13 km / h) due to the moving traffic and the coincidence of several intersecting streets. As we can find in section 7.11of [2.1]

In the map below (Fig. 3.2) we can see the zone that is delimited for taxis. There are taxis terminals defined how is possible observe in Figure 3.3. In following chapters, we talk about improvements in these terminals.

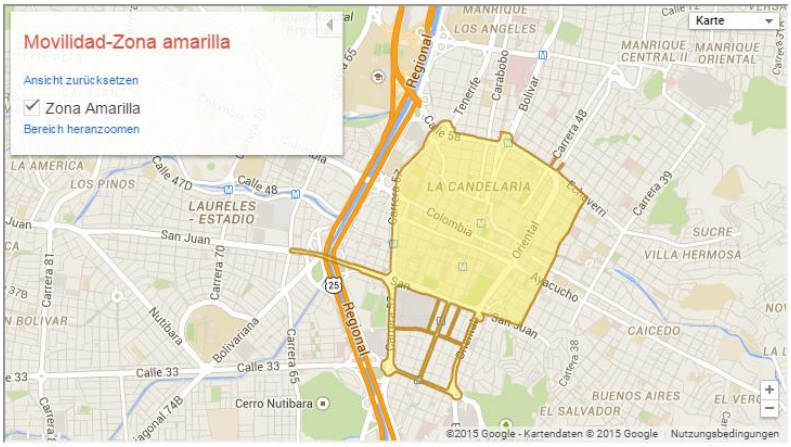

Figure 3.2: Zone for taxis [4.2]

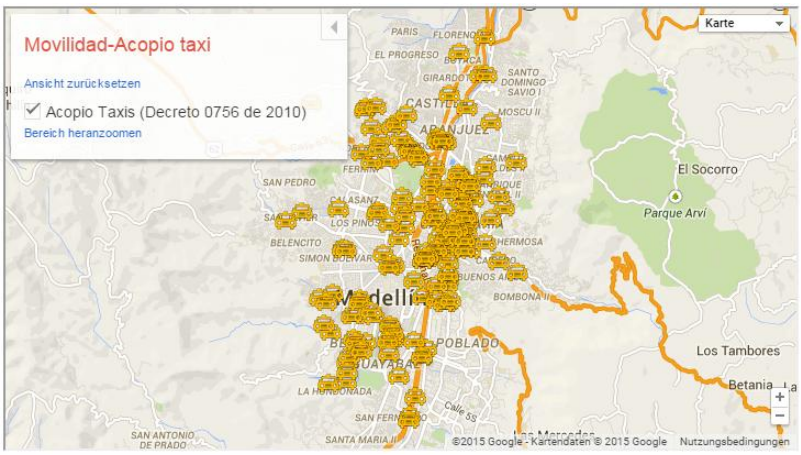

Figure 3.3: Taxis Terminals [4.2]

One of the most peculiar aspects in Medellin is the system called “Pico y plata”. This traffic measure was implemented to manage the demand of transport. With this system, the congestion in the town is avoided. This regulation of transit set a restriction of circulation in the urban area for private vehicles and for public transport as well.

There is a new rotation of the measure for 2015 which has to be respected. In case that this normative would not be complied, a sanction of 281,371 € must be paid. According with the article 3 of [3.1], the rotation for taxis is each two weeks; between 6:00 and 20:00 hours. This rotation depends of the number of license plate. The limitation of this normative could be a problem for taxi drivers due to, during a certain period, they can not circulate in the urban area.

In the article 4 of [3.1], exceptions are listed. One of these exceptions includes transports which use renewable energy. Other advantage is added to our list of “why we should make an electrical taxi”. In the Figure 3.4 below, we observe the restricted zone for “Pico y Plata”.

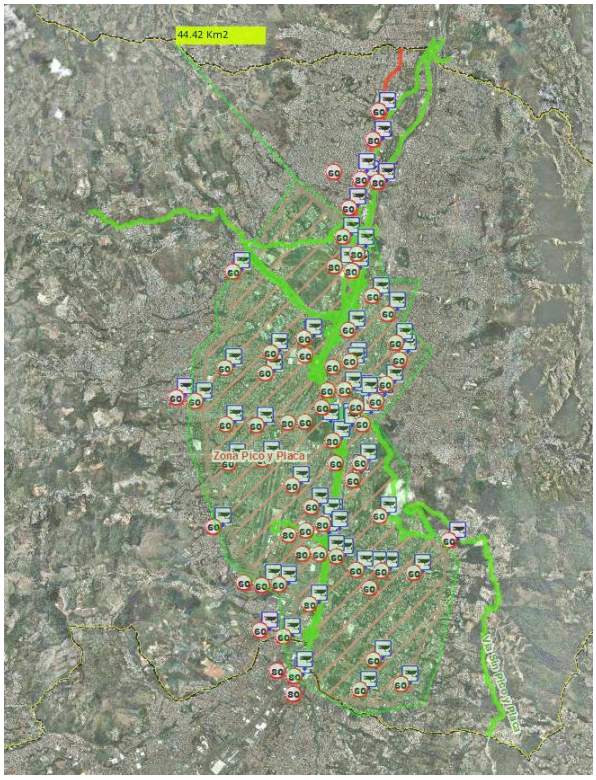

Figure 3.4: Pico y Plata area.44.42 km^2 of extension. [4.2]

3.3. Pollution in Medellín

In Medellín there is an alarming situation regarding Benzene. In the measuring scale, high values were found. Due to conventional vehicles, the number of allow values overtake in 78%, 76% and 60%. This problem is attributed to internal combustion engines.

At the same time, thanks to the traffic growth, the level of Ozone has been increased. The zone with higher number of these values could be found in the centre of Medellin. Whereas the concentration of NO_2, CO and SO_2 is appropriate.

Although is obvious that with an electric vehicles values of air pollution will be reduced, it should be noted that we are improving also the noise pollution. In the 80% of measures, the allow measure of noise were surpassed. Traffic has been conferred such as the main responsible. The World Health Organization allows a maximum of 65 decibels on the day and 50 at night. Medellín has a number of 81.9 during the day and at night about 68 decibels in general. We can find it in section 7.4.6 of [2.1].

3.4. Electric taxi Bogotá

Nowadays electric taxi service is implemented in Bogotá, making it the first city in Colombia in using electric public transport. Bogotá has become in an active member of Clinton Climate Initiative (CCI) and C40.

Given that Biotaxi is the only project with these features in Colombia, it should be a point of reference to realize the viability of our e-taxi. At present, there are 14 electric taxis running for the city. The Chinese brand BYD e6 was selected for this aim owing to they have a high range of batteries. BYD developed Fe battery, powering the e6 with a range of 300 km on a single charge in urban conditions with only 2 hours of charge. Due to altitude in Bogotá, this fact is not exactly true; the charge takes between 4 and 6 hours. Bogotá has an altitude of 2625 meters above sea level and Medellín has 1480, so the time of autonomy is higher in Medellín.

The BYD e6 is equipped with a 75kW motor. The projected top speed is 87mph. These characteristics make the e6 ideal for daily commutes, city driving and even long distance travel. In addition, during braking, deceleration and downhill coasting the vehicle's kinetic energy is converted into electrical energy and stored in battery packs through regenerative-braking functions, further improving energy utilization to increase the e6's range [4.3]. The main advantages of BYD e-6 are: not need change oil, zero emissions, lose noise during driving and taxis drivers do not have to abide by “Pico y Plata”. Comparing this bio taxi with a conventional taxi, Nissan Sentra for example, we could realize that BYD is bigger respect all sizes and heavier. One of the problems in electric cars is the weight of the battery. For this reason, we designed a taxi smaller and with optimized distribution of batteries.

In Bogotá there are four points of charge and the taxi drivers have to make turns to charge. As we will see later in the point 10 about “Possible Improvements”, this problem will be tried to be solved. Regarding batteries, the council of Bogotá decided select BYD for the quality of these; however we will see also that this is not the best option. In Figure 3.5 we observe the electric taxi in Bogotá.

Figure 3.5: Electric taxi in Bogotá. [4.4]

3.5 Normative regarding taxis in Medellín

There are lacking limitations about taxis in Medellín. As we can see, by the article 22 of Decree 172 de 2001of [3.2] “is established that public service vehicles for the individual land transport Taxi passenger vehicles, they must remain in service for not less than five years from the date of issuance of the respective transit license, date from which, may request a change in service”.

We can find other restrictions about taxis in Medellín regarding colours and obligatory elements. For our project is relevant Decree 174 de 2001 in [3.3], which establishes that “if the vehicles taxi class are of public service and provide a regular service in one district or municipality or in metropolitan areas, must be painted completely of yellow; but if these vehicles are affiliated with a company for special services, must be painted of green and/or white”. Our taxi is adapted for disable people, so in this case we have to comply with the second one.

Owing to our electric taxi is designed in Germany but built in Colombia, it is important to know about automatic homologation. According to the article 137 of [3.4] “Imported or produced in the country, intended for private shuttle, except for commercial vehicles in accordance with international technical standards for weight, dimensions, capacity, comfort, graphical control or electronic speed limit, control equipment to the pollution, facilities for the disabled, among others, approved by the transport authorities and environmental country of origin, shall not require approval before Colombian authority”. Because of the same previous issue, we must obey it due to compliance with this requirement is necessary for import approval, assembly or manufacture thereof in Colombia condition.

4. Electric taxi

4.1. Global analysis of energy

One of the most important aspects regarding electric automobiles is ecologic contribution. In fact, we should distinguish between direct emissions and indirect emissions. The first are produced by the motor. These are provided by manufacturers. We do not have to worry about these, although indirect emission becomes part of our problems. Indirect emission is produced by external systems, meaning which give all the necessary energy to work. For example, regarding petrol, that is about 15 %; known as refinement. Electric vehicles pollute due to generation of electrical energy to run the vehicle.

Because of an electric vehicle has to consume non-renewable resources, is an important aspect to consider using renewable electricity as a source of primary energy. In this project we do not go into detail about this, however is important keep it in mind for future researches.

Other problem that stalks us is losses when primary energy is converted in useful energy. Is for this reason, we will see solutions regarding this trouble, such as Kinetic regenerative breaks and piezoelectric on the roof.

4.2 Batteries

Batteries are the most important problem of electric vehicles. There are plenty of researches trying to improve the life of batteries and testing with different materials, without finding the perfect solution.

Firstly, is necessary to know three terms of battery management system. These are: the State-of-charge (Soc), the State-of-Health (SoH) and the remaining runtime. “SoC is a percentage of the maximum possible charge hat is present inside a rechargeable battery; SoH is a measure that reflects the general condition of a battery and its ability to deliver the specified performance in comparison with a fresh battery. Lastly, the remaining run time is the estimated time that the battery can supply current to a portable device under valid discharge conditions before it will stop functioning”. [1.1]

During the life of the battery, its performances are inclined to deteriorate gradually owing to irreversible physical and chemical changes that take place with usage and with the time. These make that finally the battery could not be used. It is here when we should talk about SoH. We have to find out which kind of battery is better for our operational conditions. Basing on different electric vechicles in the market, we will see Li-ion batteries, Li-Sulfur batteries and the batteries used for Biotaxi in Bogotá.

Li-ion Batteries

The composite electrodes are composed of active materials particles grasped together by a band and a filler material like carbon black. The negative electrode is fully lithiated when the discharge is on the beginning point. The positive electrode is ready to accept lithium ions. The cell voltage decreases as the same time as discharge. The managing voltage of Li-ion batteries is critical and overcharging consequences in speedy aging and might cause fire or even exploding batteries. This is one of the main disadvantages of Li-ion batteries. The main characteristics of this kind of battery appear in Table 1:

Average operating voltage (V)	3,6
Energy density (Wh / l)	200-280
Specific energy (Wh /kg)	90-115
Self-discharge rate(% month at 20 °C)	1-10
Cycle life	500- 1000
Temperature range(°C)	-20 - 50

Table 1: Li-ion features [1.1]

The company Faam uses this battery and they have been achieved 130 km of autonomy and weigh of 1500 kg [4.5]. The main advantages of Li-ion batteries are lightness of components, high energetic capacity, resistance to discharge and high regeneration cycles. While its fast degradation and sensitive to high temperatures make it not the perfect option.

Additives of Graphene

Electroactive polymers are a new creation of green cathode materials for rechargeable lithium batteries. Nanocomposites have been developed joining graphene with two polymer cathode materials, poly (anthraquinonyl sulfide) and polyimide, to improve their high-rate performance. The highly dispersed graphene sheets in the nanocomposite extremely enhanced the electronic conductivity and allowed the electrochemical activity of the polymer cathode to be proficiently utilized. This allows ultrafast charging. [2.2]

Li-S Batteries

To get flexible Li-S battery electrodes, we can add Graphene foam to obtain high energy density, high power density, and longer life. The graphene foam can provide a highly electrical conductive, mechanical support and enough space for lofty sulfur loading. The high sulfur-loaded electrodes retain a high rate performance with reversible. These keep up stable cycling performance with approximately 0.07% capacity decay per cycle over 1000 cycles. This indicates that such electrodes could enable high performance, fast-charging, and flexible Li-S batteries that show stable performance over extended charge/discharge cycling. [2.3]

Summing up, a vehicle with this kind of battery and a capacity of 50 kWh provides a continuous power of 30 kW. With a double layer to the core, that ensures efficiency close to 100% standing out its ability of not disappear quickly. That is rewording in more autonomy. [4.6]

Iron-Phosphate Batteries. Biotaxi Bogotá Batteries

The Battery Lithium Iron Phosphate (LiFePo) is a kind of rechargeable battery, specifically a variety of Lithium-Ion battery, which uses LiFePO as cathode material. These batteries offer longer life, higher power density and are much safer [4.7].

The main characteristics of this kind of battery appear in Table 2:

Average operating voltage (V)	3,2
Energy density (Wh / l)	220
Specific energy (Wh /kg)	300
Cycle life	2000

Table 2: Iron-Phosphate Battery features [4.7]

As we can see, comparing with Li-ion battery, Iron_Phosphate battery has more specific energy and more durability. This one is safer and it has quite good efficiency in complete cycle.

Li-S battery would be the best option; nevertheless, owing to it is not implemented nowadays, we opt for Li-ion battery for our electric taxi. With these batteries we could know the behavior and efficiency due to known vehicles use it.

4.3 Temperatures and overpotential

One of the factors to be considerate upon select a battery is the temperature. The average temperature in Medellín is 22°C with a subtropical climate. Therefore, for future analysis we will round off 25°C. In the Table 3 we could see that this temperature will not be a real problem for the resistance of batteries.

Temperature(°C)	Resistance (Ω)
-10	550550
5	25340
25	10000
45	4372

Table 3: Resistance values at different temperatures [1.1]

Regarding overpotential dependence, we will see results obtained for a fresh battery on the basis of a partial charge/discharge cycles, compared with aged batteries. Besides we can see that the temperature will also be considered. Overpotential renders the difference between the Electro Motive Force and the charge/discharge voltage. In the Figure 4.1 the battery overpotentials calculated for a fresh and an aged battery after charge and discharge steps at 25°C is showed.

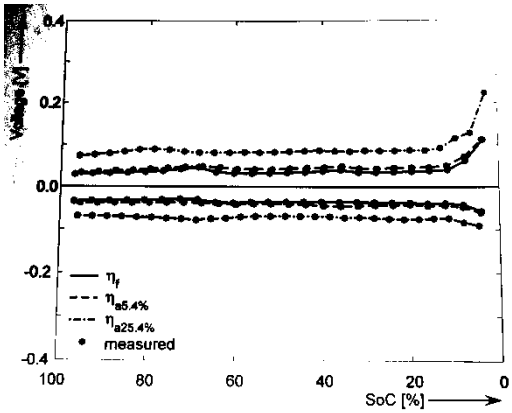

Figure 4.1: The overpotential of fresh (f) and aged (a) batteries measured 25°C [1.1]

As we may observe in the figure, the overpotential of a fresh battery (continue line) is lower than an aged battery. The same happens with an aged battery with 25.4% capacity loss battery (broken line) at 5.4% SoC (point-line) [1.1].

4.4. Disposition

One important aspect to be considered is the distribution of the batteries. There are plenty of allocations of batteries. For this reason we decided to observe the most important-successful electric automobiles.

The number one in the ranking is the model Tesla S. It is marked by a floor battery that occupies the complete available area between the axles and side body. This flat battery is showed in the Figure 4.2. More than 7000 cylindrical battery cells are vertically adapted inside an Aluminium box that also toils as the body structure's floor.

Figure 4.2: Tesla model S. Flat battery [4.8]

Tesla's battery is made of Lithium ion Panasonic 18650 with a capacity of 60 kWh. The type of load / time at 100% slow is 230 V to 3.3 kW in 12h. Ultra-fast load is between 90 and 120 KW in 20 minutes [4.8]. That last one provides 200 km. This distribution implies an over-the-top weight, owing to we decide to make an economic taxi, this option is rejected. Nevertheless this distribution gives us an idea to the right way.

Other important electric vehicle is Volkswagen e-Golf. The battery contains 24.2 kWh and weighs 318 kg [4.9]. That is lighter compared with 450 kg of Tesla. The vehicle is estimated to use 12.7 kWh / 100 km. The number of KWh is lower; nevertheless our taxi is designed for running in the urban area with limited itinerary. In Figure 4.3 we can see its details.

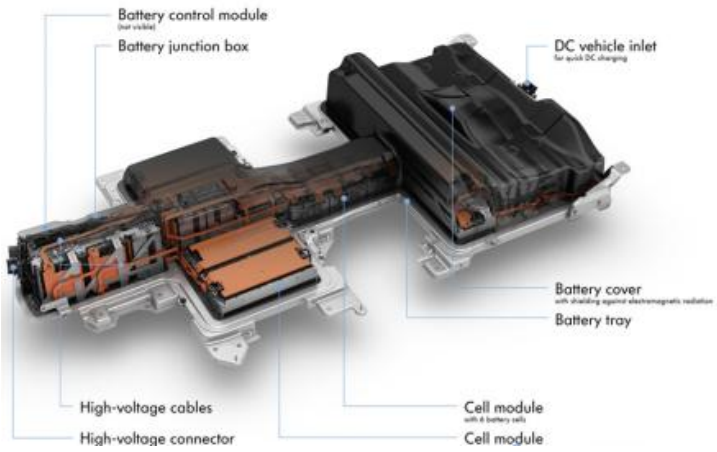

Figure 4.3: VW e-Golf batteries [4.10]

The disposition of the batteries affords a balanced weigh distribution lengthwise the taxi's floor, helping with the design optimization. We can see this distribution in the Figure 4.4.

Figure 4.4: VW e-Golf interior distribution [4.10]

Finally, we can see the distribution of our design in the Figure 4.5; the reddish one. The batteries distribution has a length of 2505,920 mm and an area of 1.81x 10^8 mm^2 approaching. The design is a space reserve, so the sizes are an approximation.

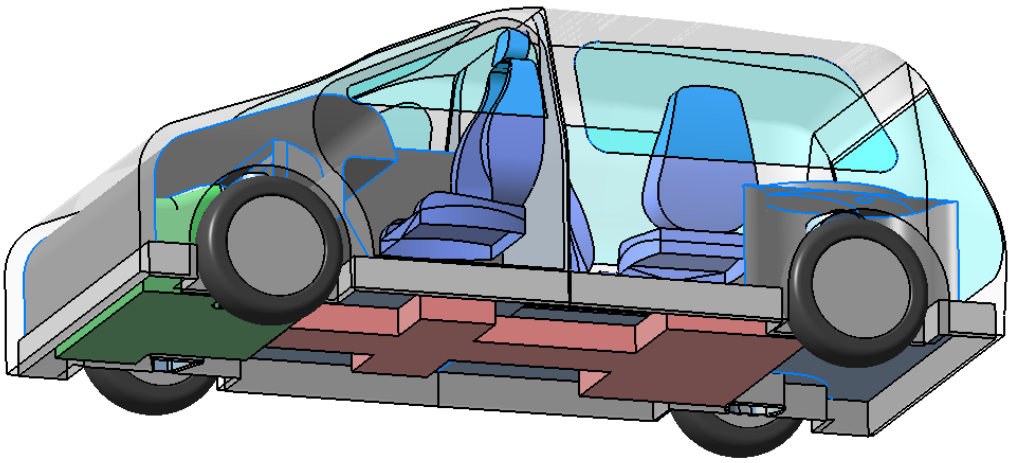

Figure 4.5: Battery's floor of electrical taxi in Medellín.

5. Electrical motor

In this section we will see the most characteristic aspect of the electric taxi; the motor. Mainly the motor of an electric vehicle can drive AC or DC. The difference between these two types is how they are supplied. The DC power is supplied directly from the main battery and the AC current is fed through the energy emitted by the battery beforehand into alternating current through the inverter. Meaning, the batteries store energy that gives the charger in the form of direct current (DC). The converter transforms the high voltage DC, which provides the main battery, low voltage DC. This way of current is used to power auxiliary 12 V batteries, which are feeding the electric auxiliary components of the car. Finally, the inverters are responsible for transforming the DC power which is given by the main battery. Is for this that we can feed the AC motor of electric vehicle [4.11].

Thanks to the electrical motor, we can save on refrigeration circuit and oil, therefore we do not need too much maintenance. Besides, it does not need changing gears, except a mechanism to distinguish between forward or reverse, it may be the reverse polarity of the own motor.

5.1. Chosen Motor

Actually, the best option would be use one motor in each wheel. Nevertheless that is quite expensive and our aim is make an electric taxi as economic as possible. Observing other electric vehicles, finally we decided to use an AC synchronous electrical motor, used by VW e-Golf. One of the reasons of choosing this one is that it runs on alternating current, which allows it to recharge the electrical batteries in the vehicle through regenerative braking system. We have to use an inverter due to use an AC current; in spite of this we are quite interested in taking advantages of kinetic brakes system.

In fact the chosen motor is an 85 kW AC synchronous electric motor. The amount of 115 hp is provided by this one and its 270 Nm of torque turns it a good option. Comparing with other electric vehicles, a remarkable 270 Nm of torque is higher than

the Nissan Leaf torque. On a single full charge, this one may range up to 133.58 km, getting an EPA-estimated 116 MPGe.

EPA-estimated estimates it in 126 city/105 highway MPGe. MPGe (miles per gallon) is a measure of the average distance travelled per unit of energy consumed. Based on EPA formula of 33.7 kWh equal to 3.7854 of gasoline energy, EPA rated it equivalent to 126 MPG measured as gasoline fuel efficiency in city driving and 105 MPG in highway driving. Actual mileage will vary and depends on many factors, including driving and charging habits, weather and temperature and battery life among other [4.12].Despite the small size, our motor is genuine powerhouse.

5.2. Distribution

There are several options regarding setting of the motor. Owing to the distribution of the batteries, we decided that the best option is front-mounted-engine. The engine is mounted transversally. In Figure 5.1 we can observe where the AC synchronous electric motor, the drive differential and power inverter circuits are. The ensemble will be contained within packed housings held up by a rubber isolated subframe.

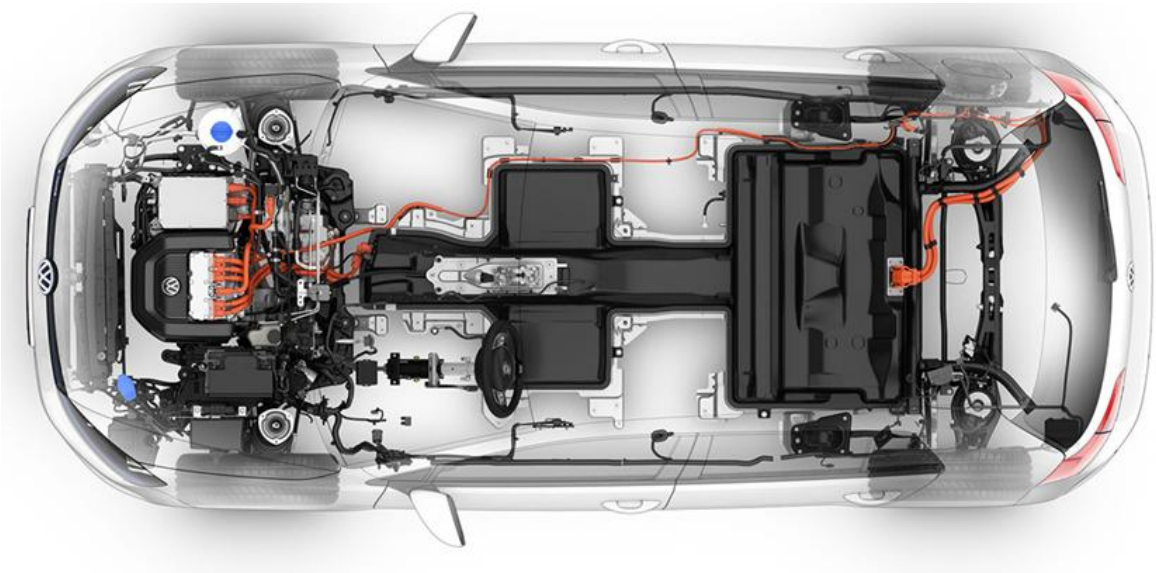

Figure 5.1: VW e-Golf distribution [4.10]

We can see in our design how the reserve space is. In Figure 5.2 the volume of the complete space is showed (5.2 x 10^8 mm^3).

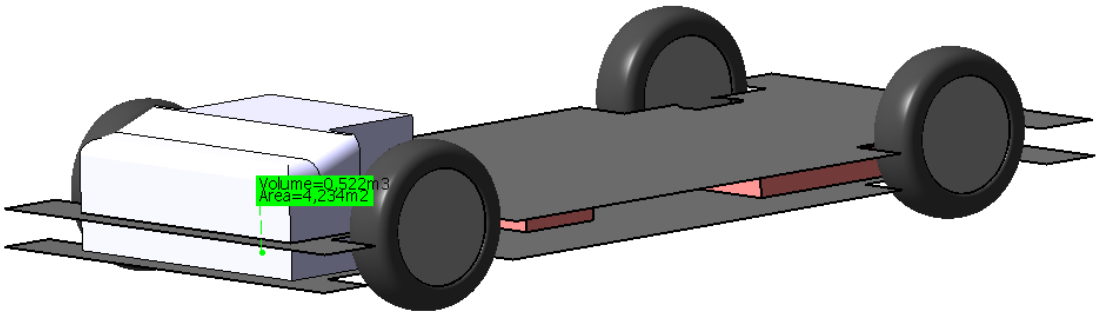

Figure 5.2: Engine space reserve

5.3. Plugin

Due to our electric taxi will be built in America, the model of plugs for our situation is SAE J1772 [4.13]. It accommodates 15A to 75 A in AC systems. The specification includes four charging options. In Figure 5.3 we can observe how better this system is compared with other suppliers.

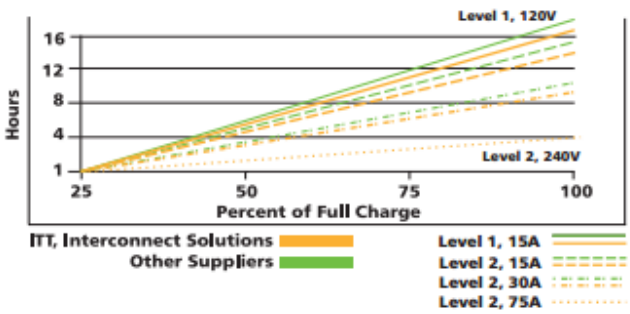

Figure 5.3: Hours/ percent of full charge in SAE J1772 [4.13]

This system covers the main physical, communication protocol, electrical and performance requirements for the electric taxi conductive charge system. In the section 10 about improvements we will see several ideas regarding plug system.

5.4. Costs

In this part we are going to compare costs between electric vehicles and internal combustion engine vehicles. Keeping in mind batteries lease, The International Energy Agency estimates that high volume production costs for Li-ion batteries could be 443€/kWh, and this is why the made in advance costs for batteries packs would be 7700€ approximately. In [2.4] there is a comparative between Clio Authentique 5P dCi 75 eco2 and Renault Zoe Z.E where we can realize that the price for the first one, sales price without aim (+19,6 % sales tax), is 16000€ while for the second one is 20700€. The battery rental for 36 months, up to 150000 km/year is 79 €/month.

Regarding ownership costs, in this studio prices do not represent manufacturer cost but these could be used like an approach. Electric vehicle prices include no cross-subsidy which is a portion of the battery cost. We are going to base on French study with their tax rates, fuel and electricity prices. It is not our political economy scenario; nevertheless its results may help to understand the importance of electric vehicles in our society.

Government revenue streams have an impact by high rates of electric vehicle. That model is statement from social security taxes, VAT and other taxes paid on intermediate outputs. This goes as far as fuel-related sectors of the economy. In the Figure 5.4 we can see the results. It shows us that government revenue impacts are significant. Government revenue over the life of the vehicle is 2.5 times and 1.5 times, severally, the acquisition price of an internal combustion engine vehicles and electric vehicle excluding purchase subsidies. This revenue stream is managed by social security taxes. Moderately, it finds that internal combustion engine vehicles and electric vehicles generate approximately equivalent amounts of government revenue over their lifetime with a slight advantage for the electric vehicles [2.4].

	ICE		BEV	
	Manufacture	Use	Manufacture	Use
Consumer expenditure	*14600*	*17650*	*24400*	*10814*
Government revenue				
VAT	2862	4121	4782	2119
Fuel/Electricity Tax		3375		420
Production-related taxes	1002	1031	1648	618
Social security taxes	10594	12837	18505	7798
Total Revenue (no subsidy)	14457	21364	24936	10956
(combined)	***35821***		***35892***	
Total Revenue (ex subsidy)	14457	21364	18956	10956
(combined)	***35821***		***29912***	

Figure 5.4: Lifetime Fiscal and Social Revenues for a “B” Class French ICE and BEV (€ per vehicle) [2.4]

The yearly maintenance costs for electric vehicles will be less than the analogue internal combustion engine vehicles. This is because of an electric motor has a smaller number of moving parts if we compare it with a combustion engine. We assume that an internal combustion vehicle costs €70/ year more of maintain than an electrical one in line. There are other studies which estimate higher costs of maintenance; approximately of 300-400€.

In this studio electricity losses during charging are not accounted. These are estimated to be around 10% to 15%. Nevertheless, in [2.5] The US Energy Policy Information Centre analyses the consumption of a midsize plug-in electric vehicle to be 27.5 kWh/100 km, a 3.64 (km/kWh) efficiency. It is important to remind that electric motors are much more efficient than combustion engines.

As we can see in Figure 5.5, a chart of consumption for an average electric vehicle is showed. Auxiliary equipment of kW/ 100 km is included. This information is very useful due to it is based on Volkswagen e-golf and our batteries and engine are planted like that.

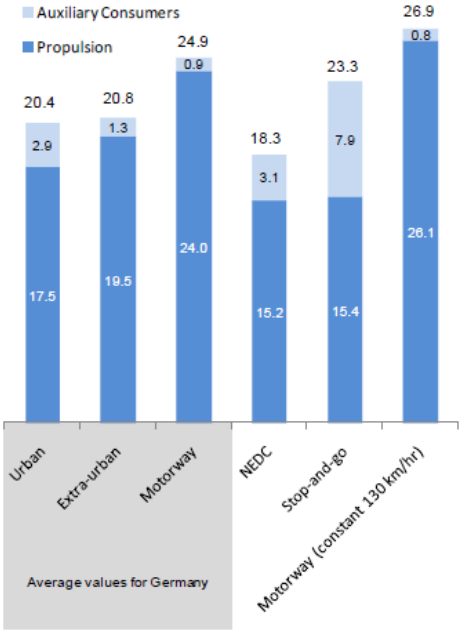

Figure 5.5: Modelled BEV Electricity Consumption for a Compact Car in Germany (kWh/100 km) [2.4]

These evaluations are based on second-by-second speed profiles corresponding with weighted average German traffic levels in urban and extra-urban areas. Due to electrical auxiliary devices consumption is a function of time, not of distance, we can see driving profiles in slower traffic.

The kWh in Medellín costs approximately 0.13€ (Colombia is the most expensive country in South America respect electricity). In the case of running in urban area (20.4 kWh/100 km), per each 100 km the price is 2.65€.

In the section 8.7 of Eileen Niemeier's thesis about the same topic [2.1], we can find that the number of travels in Medellín by one taxi is approximately of 17.5 per day. Due to the number of taxis running daily is 21477; 375847.5 are the total journeys. As we saw in the section 3.2 of this project, 8.75 km are estimated like one journey. In few words, 17.5 journeys of 8.75 km nearly are 153.125 km per taxi driver; **4.06 €** rounded cost one working day of a taxi driver. This amount is an approximation because there are several factors to keep in mind like batteries lease and the simple fact that the autonomy of electric taxi does not afford run 17.5 journeys with one charge. In Medellín the model Nissan Sentra is normally used as a taxi with a consumption of nearly 12 km/L, with 153.125 km per taxi driver; 12.76 L are

consumed. In Medellín the price of fuel is 1.87 €/ L rounded, so **23.86 €** is the cost of one working day.

So 3.48 € facing 23.86 € is a high profit. If we extrapolate the price for one day for the whole service of taxi drivers, we must pay 74,814.7 € using electric taxis facing 512,441.22 €. If the government will decide to change all conventional taxis for electric taxis, they would save high amounts of money; besides they will start to pay less for pollution price.

5.5. Transmission

One of the advantages of electric vehicle is that it does not need gear box. Torque and power curves are virtually constant; this is why the efficiency does not almost change. Owing to traction is electrical; there is less aerodynamic friction so we do not need a cooler. Actually we need one of this to refreshing but not to dissipate heat.

The transmission will be just a single speed transmission which afford us single speed transmission. Basing on VW e-Golf motor will go 0-100 kph in a leisurely 10.4 seconds.

6. Systems

6.1 Suspension

The suspension is one of the most important points to deal with viewing that our internal design is relative different to a normal one and we should assure passengers comfort.

The basic features of suspension must be in first place the adhesion; keeping the tires in contact with the road ensuring minimum load variations. The second one is the directional control which ensures guidance of the wheels during the movements of the suspension and steering. The movements of the wheel relative to the body must be as vertical as possible without creating others one. At last but not least, the comfort which filtering road deviations. Other features that we can find in suspension are the behaviour of control forces produced by tires such as traction, braking, lateral forces, burdened; withstand body roll and keeping the vehicle height.

For our electric taxi, an independent wheel suspension will be implemented. Independent suspension use to have wheels on the same axle articulated separately; the movements of wheels are independent to each other, the control of the geometry of each wheel and two semi-axes are symmetrical. Their main advantages are: tiny space requirement, a kinematic toe-in change tending towards understeering, effortless steerability with existing drive, low weight and no reciprocal wheel influence.

Independent wheel suspensions achieve that the chassis of our taxi must be able to: deal in the installed motor power, acceleration improvements, greater peak and cornering speeds. The requested kinematic behaviour of the rebounding is ensured by transverse and trailing links. The compression of the wheels and the transfer of the forces to the body are also ensured.

Despite the fact that rigid axis give our vehicle robustness, constructive simplicity and easy attachment to the body, we decide to install an independent suspension.

Mountings that yield under load are required by the suspension control arm. That may influence the springing as well. The driving comfort can decrease owing to the friction that appears because of the shifting parts. Not only the driving comfort must be cared, in this special taxi the distribution of the seats are totally different than a normal vehicle, so we should have special attention in this when we decide which kind of suspension must be implement. In the Figure 6.1 we can see the seat distribution that was aforementioned.

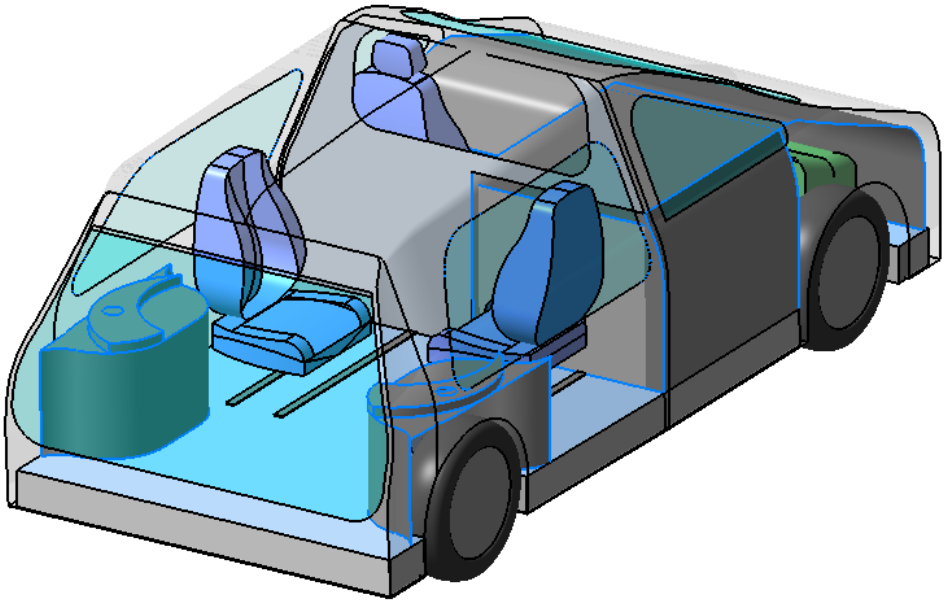

Figure 6.1: Seats distribution

As we can see, the seats are not exactly opposite each other. Is for that reason we should be especially cautious with the suspension among others. We must avoid that the irregularities of the highway hamper our comfort.

In the evaluation of the whole body vulnerability we have used an international standard specifies. The main purpose of this part of ISO 2631 [3.5] standard is to define quantifiable methods of whole body vibration in relation to human health and comfort, the likelihood of perception of vibrations, the incidence of evil movement.

We are not going into detail with calculations, nevertheless is important to know some details about frequencies:

In first place, it should be noted that the range of natural frequencies is:

- Natural frequencies of vehicles's body between 1 Hz and 3 Hz
- Natural frequencies of non-suspended mass between 5 and 40 Hz.

Regarding range of frequency vibration of suspension:

- Vibrations are considered between 0 and 25 Hz.
- Between 25 and 25000 Hz are considered noise.

In [3.5] three limits for the vibrations are defined in the interval between 1 and 80 Hz. The first one is an exposition limit which above it, there is a risk for human health; fatigue limit must be reduced. Last one implies that over this limit, some quotidian actions are limited. [2.6]

We must know that the effect between frequencies of front axis and rear axis, regarding movements of the sprung mass, is not the same. We can see in the Figure 6.2 that there is more oscillation frequency in the rear axis than in the front axis. Is for that we must design rear suspension with more stiffness.

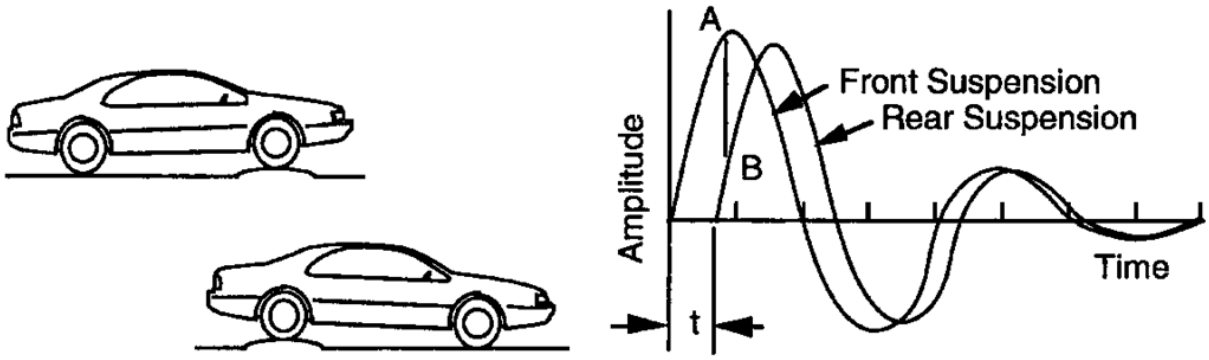

Figure 6.2: Effect of the frequency ratio between the front and rear on the movements of the sprung mass [2.7]

Front Suspension

McPherson suspension was chosen for front suspension with lower arm triangle (Figure 6.3.b). This one was selected owing to features such as: “long spring travel, three bearing positions no longer needed, better design options on the front crumple zone, space at the side permitting a wide engine compartment” [1.2]. The design is composed by a steering knuckle which is firmly fixed to other tube. McPherson suspension conducts and controls the wheel. Longitudinal and lateral forces are absorbed by a piston rod strengthened from 11mm to 18 mm up to 25 mm in passenger vehicles. We can see a representation of this suspension in Figure 6.3.a.

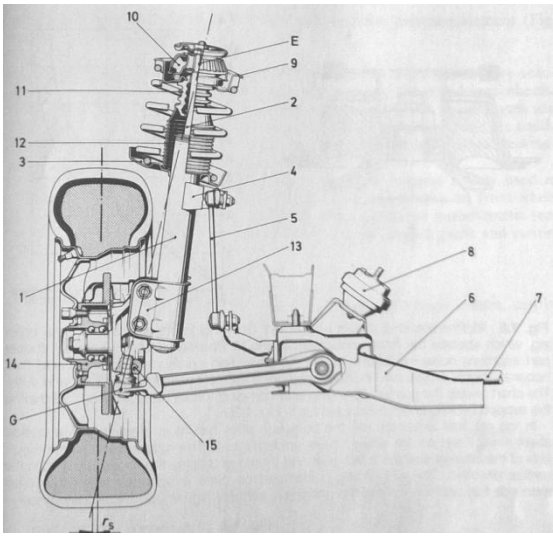

Figure 6.3.a: McPherson [1.2]

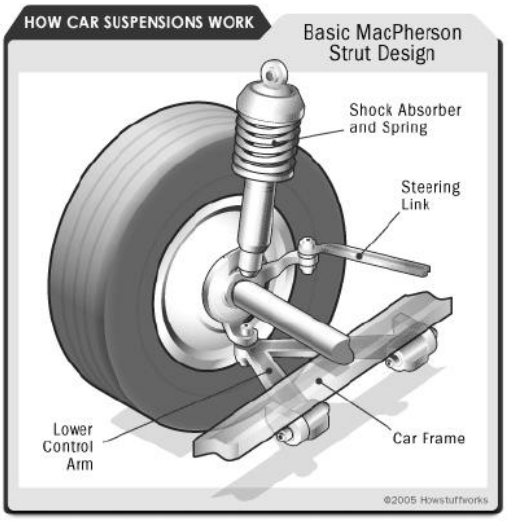

Figure 6.3.b: Lower arm triangle [2.7]

In our design I do not go into detail about exactly sizes, there is just a space reserve. The shock absorber and spring is characterized by a cylinder with a volume of $3x10^6$ mm^3 and the space occupied by the triangle distribution in the lower arm has a volume of $4x10^6$ mm^3. In the Figure 6.4.a and Figure 6.4.b we can see the space reserve for McPherson suspension.

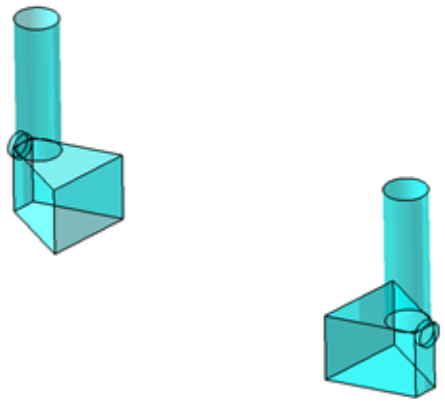

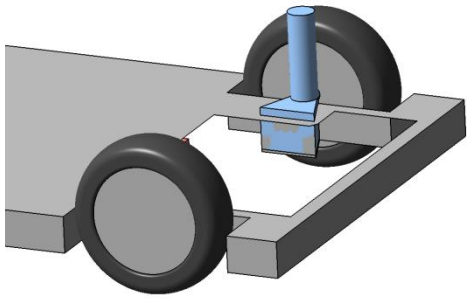

Figure 6.4.a: Space reserve front suspension **Figure 6.4.b:** Assemble

Rear suspension

For rear suspension we have taken some ideas from other electric vehicles to know which suspension is affordable for a vehicle with these features. These electric vehicles are Tesla model S, Renault Zoe and VW e-Golf. Nevertheless, due to we are trying to optimize space and make the taxi as economic as possible, every options were rejected. For example VW e-Golf uses multilink, with all the space that this one requires. The same happens with Renault Zoe which uses a trailing arm suspension. Tesla model S uses multilink as well. At first, we wanted to use Tesla's front suspension for our rear suspension. Owing to this kind of suspension is a pneumatic suspension and the prize of this is high, we decided to use a double triangle with two articulated and independent arms suspension. With this solution, the space is optimized and we get less weigh for our vehicle. In the figure 6.5 this suspension is showed.

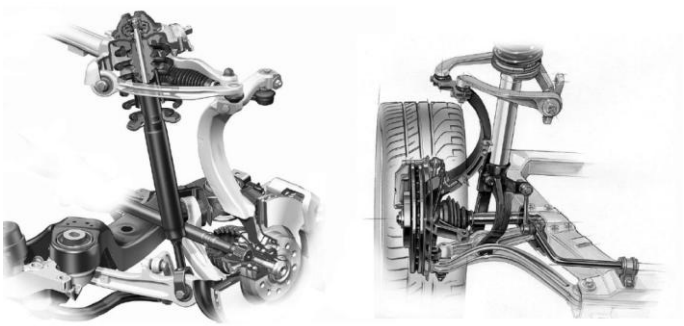

Figure 6.5: Double triangle, two articulated and independent arms suspension [2.7]

As happens with front suspension, the design of these in our electric taxi is just a reserve space. The volume of this suspension was designed trying to represent the size of the original. In the Figure 6.6.a, we can see the shape of the rear suspension. On the right the ensemble suspension is showed Figure 6.6.b.

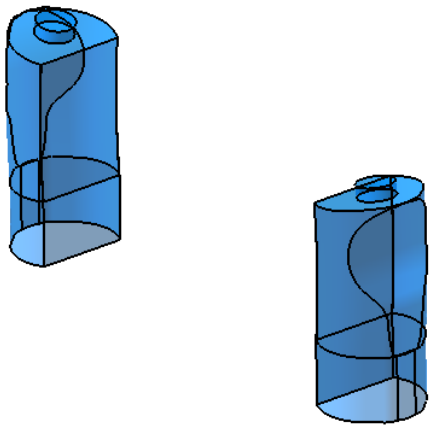

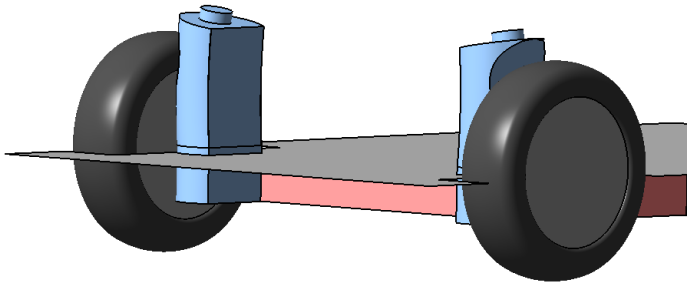

Figure 6.6.a: Space reserve rear suspension **Figure 6.6.b:** Assemble

6.2 Antiroll Bar

In our electric taxi we can find antiroll bars in both suspensions. Normally this bar is used just in rear suspension; nevertheless most of the vehicles named above use it in both suspensions. Despite of the old use of antiroll bar to limit the amount of body roll bigoted by lateral acceleration without the necessity of using suspension springs, nowadays we use them as an adjustment to the basic understeer/oversteer balance and a crutch [1.3]. With these bars we ensure that sideways tilting will be reduced. The steel used is a medium carbon steel 1045. [2.8]

With a properly management of the dimensions and mechanism of antiroll bar, as well as combining the action of the front and rear suspension, we get the behaviour of the vehicle accommodate our needs.

7. Wheels and tires

Even though it could be not obvious, tires constitute part of the most important elements in a vehicle. This is because they resist the weight of the vehicle, soften the effect of the road irregularities, develop brake strengths and drive, develop lateral strengths, assure directional stability and allow the rolling. For all these reasons we are going to see in detail the wheels and tires selected.

7.1 Tires

Regarding tires, the first question that should be considered is: diagonal or radial? Nowadays diagonal ply tires are not really used in passenger vehicles; actually diagonal tires are used more in emergency cars, motor cycles, racing cars and agricultural vehicles. It is due to this kind of tires affords support high load capacities. These are differentiated by the load to be supported, the possible maximum speed and whether a tubed tire is led. Nevertheless, radial tires have plenty of advantages: [2.7]

- High ride comfort
- Greater directional stability at the same tire pressure.
- High capacity of drive, better aquaplaning properties.
- High resistance of rolling
- Greater behaviour respect wet-braking
- Support high temperatures
- High resistance of wear
- High load capacity with light components

It is for that reason we are going to talk about radial tires. Mainly, radial tires are two bead cores fixed together radially thanks the carcass. The carcass is made of rayon (an artificial silk cord) or nylon. The necessary stiffness is provided by a belt of cords. These last could be also a combination of steel like rayon or nylon cord. The steel predominates in the belt. The exact composition of this is: Tread plies two rayons plus one aramide and plus one steel. The belt is made of two layers of rayon, a layer of aramide and an additional layer of steel. The sidewall is made of two artificial silk cord layers.

Our tires will be P 205 / 55 R 16 - 91H of the brand Goodyear. Due to our electric taxi has the same battery and the same motor than VW e-golf, we decided to introduce the features of this model to know load index. As result, for our taxi, we have 205 like width of the new tire on the measuring rim and at measuring pressure of 1.8 bar. 55 is the cross-section ratio as a %. “R” means that the code for tire design is radial. The number “16” is the rim diameter in inches. 91 is the load index which means the maximum load capacity 615 kg at 2.5 bar and 160 Km/h. All these values are available in the tables of [1.2]. Regarding “H”, our taxi is authorized up to 210 km/h.

In Figure 7.1 we can see all these features. The size 92.25 mm is 55% of 205 and 203.20 mm is 8inches (half diameter). In Figure 7.2 the real wheel is showed.

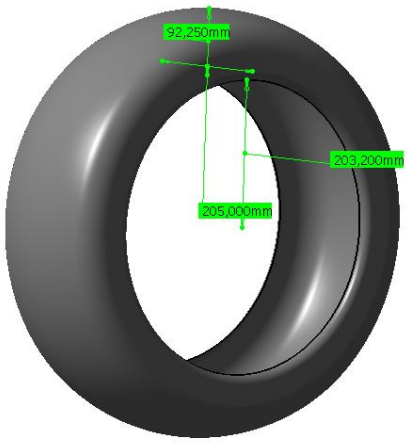

Figure 7.1: P 205 / 55 R 16 - 91H

Figure 7.2: Real wheel [3.16]

The price of each tire is around 87 € with this brand. So the final price for the ensemble is 384€.

7.2. Tubeless

The tubeless tire has almost the same outer than the tubed tire. The tubed tire is easier and faster to fit and the inside part of the lining affords self-steal small incisions in the tire. The inner lining prevents air escaping from the tire. Tubeless characteristics are the safety contour on the rim and its air-tightness [1.2].

7.3. Wheels

The wheels are used like a style element. Good brake ventilation must be permitted by wheels and these must secure the connection to the hub flange. Our wheels are made of Aluminium. Sheet metal disc wheels are used by most passenger cars due to the price and these have high stress limit. A rim and a welded-on wheel disc are together. The size of these is 16 x 6.5 in. In Figure 7.3 we can see it.

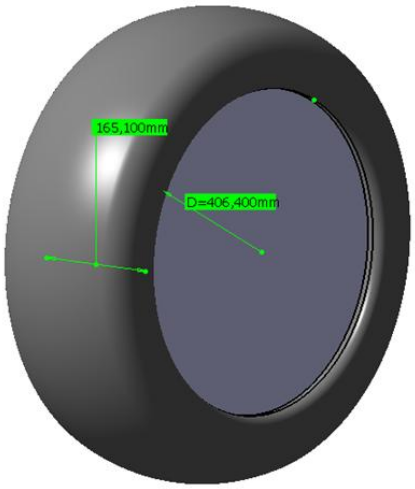

Figure 7.3: 16 x 6.5 in Aluminium

Due to for aerodynamics aspects the rear axis must be shorter than front axis; we can see the length in the Figure 7.4. The front axis measure is approximately 1752 mm and the rear one is nearly 1757 mm. The distance between front and rear axis is approximately 2980mm.

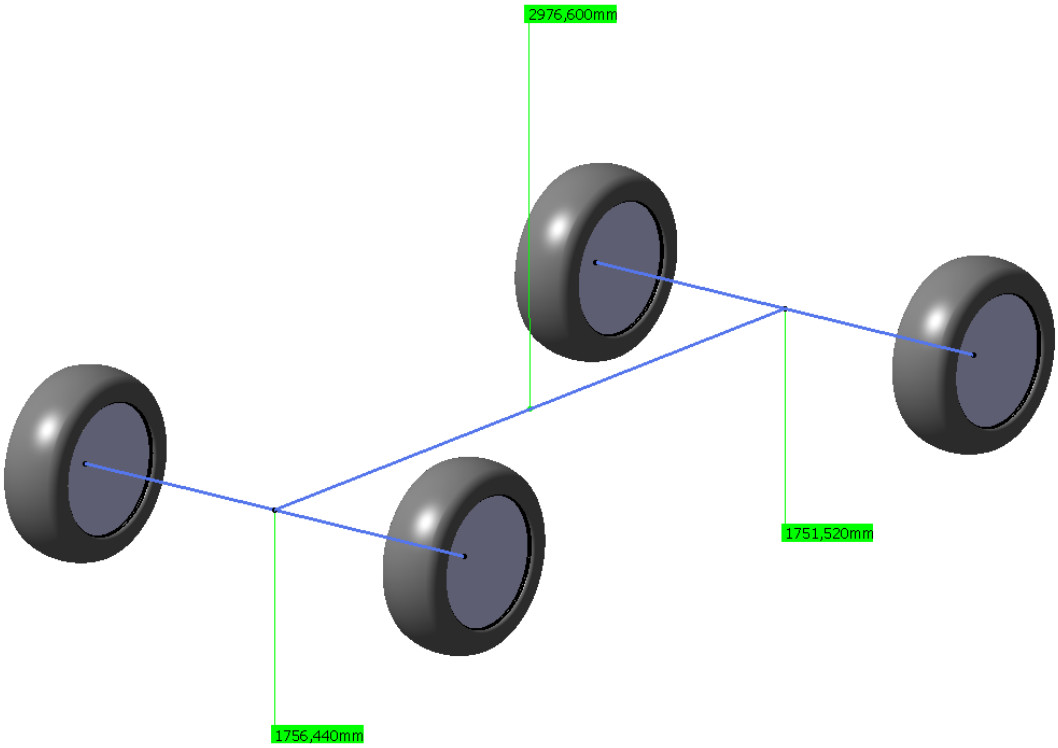

Figure 7.4: Axis size

8. Adaptation for disable people

An important aim of this project is to solve one of the biggest problems in Medellín; the adaptation for disable people. In Europe we can find large associations allotted to improve the transport for disable people. We have to keep in mind that there is a problem in something so simple like that without accessible local transport, quotidian activities can be really limited for these people. Mainly, our taxis are planned to bring people to work and there would be the possibility to do the same with disable people.

Social life and amusing activities are frequently reduced; this is why we want to avoid economic and social drawbacks caused by unsuitable mobility. These also prevent the loss of self-respect and separateness. “Research with people who have regained their mobility through some form of transport provision has shown that it is the independence and freedom which this grants them that is the most frequently quoted and most valued perceived benefit“[2.9].

There are plenty of reasons for which disable people will always find serious problems when they want to use the public transport. Therefore there will always be an urgency for some alternatives of transport which provides a more secure and kind environment. Demand-responsive assistances of different ways have had a long history in many European countries, and ways are being found of making them more cost-effective. The problem is that in Colombia there is not the same mind.

Alternative ways of public transport, which are specially customized to the needs of disable people, have proved favourable in several towns in. Lastly an immense progress has been seen throughout Western Europe in the procurement of transport services and facilities to disable people to travel more easily and conveniently in an independent form. Usually taxis are also included in the network of pre-bookable services for disable people. On the other hand taxis may work conventional and then they request the aim. In European cities every taxi provides facilities to carry wheelchairs in the boot of the car and some taxis can carry passengers seated in their wheelchairs. We will see how this system will work in our electric taxi. According to the article 15 of [3.6], the rights to the effective use of public transported are established. To ensure the effective exercise of these rights, the Ministry of

Transportation, Ports and Transport, Civil Aviation and other related institutions should take measures.

There are measures about road and public spaces; nevertheless we are going to show just the concerning about vehicles. The first one is that in the design phase appear the proper integrated mass transport systems for persons with disabilities. Besides, in the following measure, we can observe that our taxi has advantages for being electric. The fact of making it available for disable people is other contribution to avoid “Pico y Plata” normative.

Exactly the norm says that vehicles that transport a disabled person regularly, shall be exempt from restrictions of mobility establish departments and municipalities “Pico y Plata”. Because of this the Ministry of Transportation regulate within 6 months these exceptions. We should keep in mind that The State, through the competent authorities, will sanction the un-fulfilment to meet deadlines adaptation and accessibility to transport.

Normative for spaces must be achieved. We will see at the end of this section how the system is working exactly to adapt a disable person in our taxi. Due to the idea is to use the own wheelchair inside the car, we must know the sizes and the spaces required to adapt it securely.

Anthropometry is another factor to consider since people of South America, our case, are smaller than in other countries. This project is designed so that the passenger is a man of America of percentile 95. Thus we take the case of larger space required. In the section of ergonomics we will see in detail more about percentile study. We are going to employ [3.7] about areas of service to citizens in public administration and [2.10] regarding accessibility to physical environment and transport.

Design Issues

In the section A.6 of [3.7] about general consideration of design for disable people, it is established a space for maneuver 15000 mm of diameter in each area where there is a significant change in the direction of the wheelchair together plus the person that helps them. In some countries, owing to the chairs are smaller, maneuvering spaces can be reduced to 1200 mm. In our case, the user would not necessarily make a significant change of direction, but our space for the wheelchair gives the measures. We can see both cases in Figure 8.1 and Figure 8.2.

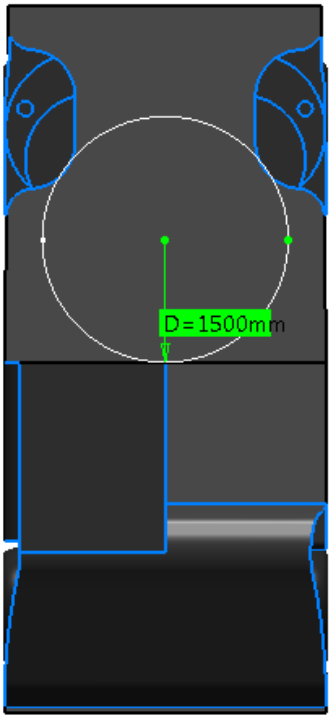

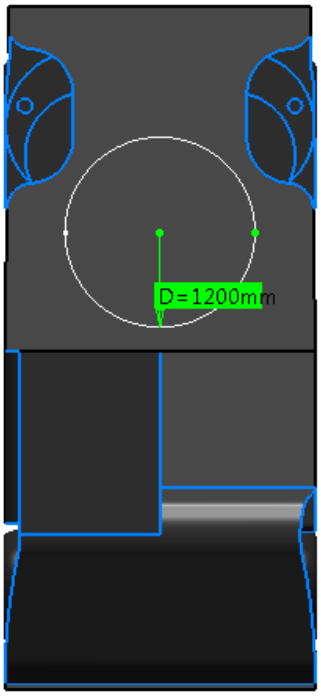

Figure 8.1: Area of 1500 mm movement **Figure 8.2**: Area of 1200 mm movement

The dimensions stated in this norm are related to the outline of the wheelchairs normally used. The outline of a wheelchair according to this standard in ISO 7176-5 is based on the technical report ISO / TR 13570-2. The chair measures are 800 mm wide and 1300 mm in length. The space requirements for passengers should be established keeping in mind the maximum outside dimension of wheelchairs. In Figure 8.3 we can observe the space required by a passenger in a wheelchair.

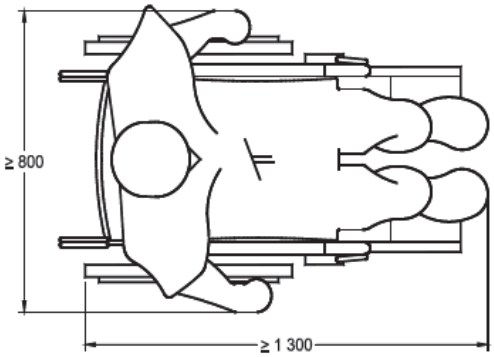

Figure 8.3: Outline of a passenger in wheelchair [3.7]

Wheelchair height is between 460 and 550 mm. The extent of the arm in horizontal direction is restricted for the user of a wheelchair. Many disable people have limited mobility in their arms, hindering them to lean forward without risk of falling off the wheelchair. The comfortable range is between 400 and 1100 mm above floor level and a maximum range of 250 mm lateral from the outer part of the wheelchair. In our taxi this last distance is 150.883 mm so we do not exceed this size. In Figure 8.4 we can observe it.

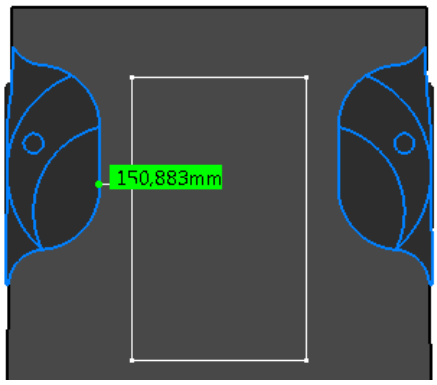

Figure 8.4: Distance of scope

When parking, access ramps from the pavement should be located next to the reserved area. In this section we will not enter in detail on parking places. The width of the ramp should measure at least 1000 m. The gradient of the ramp depends on the height from the floor to where the start of the ramp. In our case the distance is about 325 mm so as Table 2 [3.7] we are in the maximum elevation range of 350 mm. With this value the maximum slope is 6.3%. This specification implies a length of the ramp too much bigger, so we are going to use an elevator. Regarding access

elevators materials, these must be rigid with a smooth and non-slip surface for both dry and for humid conditions.

There are not too many norms about taxis and disable people. In [2.10] we can find that during access and exit of the taxi the platform has to be as horizontal as possible. We will achieve this with electrical or mechanical systems which help to save the level change. In this document we find that it is allowed the access, from outside through platforms at from inside the vehicle, fixed or movable elevators. This last one is our case, so with this document we ensure that the implementation of our elevator is viable. The only direct reference of this kind of vehicles that we can find is also in this text indicates that public transport specialized vehicles should be adapted to create accessibility to approach the vehicle and comfort as widely as possible. It should facilitate the transport of the wheelchair and other equipment.

According to the normative UNE 26494 [3.8] regarding vehicles for transporting disabled people, our taxi is classified like “M1” meaning vehicles used for the carriage of people having at maximum, besides the driver's seat, eight seats. In our case, we only have 2 places besides driver. In [3.9] our taxi is designed like Class B since our capacity is for less of 22 passengers and our taxi is not designed for on foot passengers.

One option would be store the wheelchair in the boot and use the standard seats for the disabled. This is not possible since in the section 3.2.1 of [3.9] we can find that a foldable seat, when we do not use it, is not designated for disable people. So our only choice is to use the own wheelchair like a seat and keep the folded seat in the boot. In Figures 8.5, 8.6, 8.7, 8.8, 8.9, 8.10 and 8.11 we can see down to the last detail the steps to leave the available special zone for wheelchairs. That consists in put inside the right seat thanks to the rails and changes the left seat applicator and fixes it in the right rails. When both seats are folded we can close the door boot.

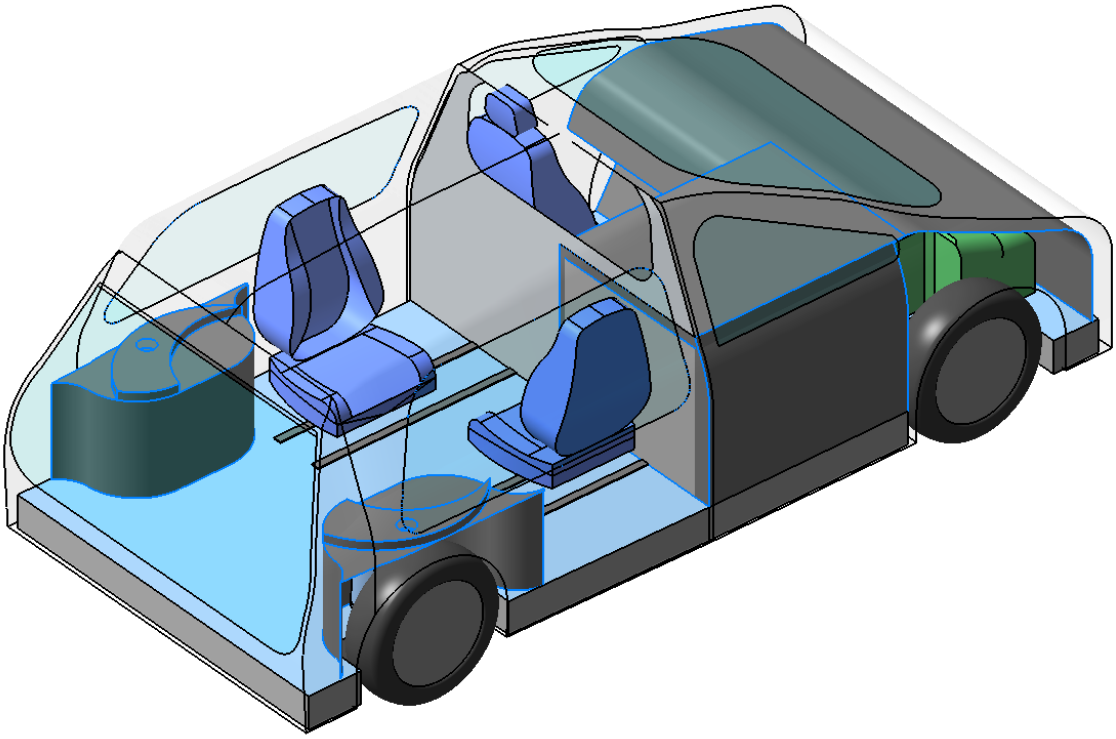

Figure 8.5: Initial position of seats.

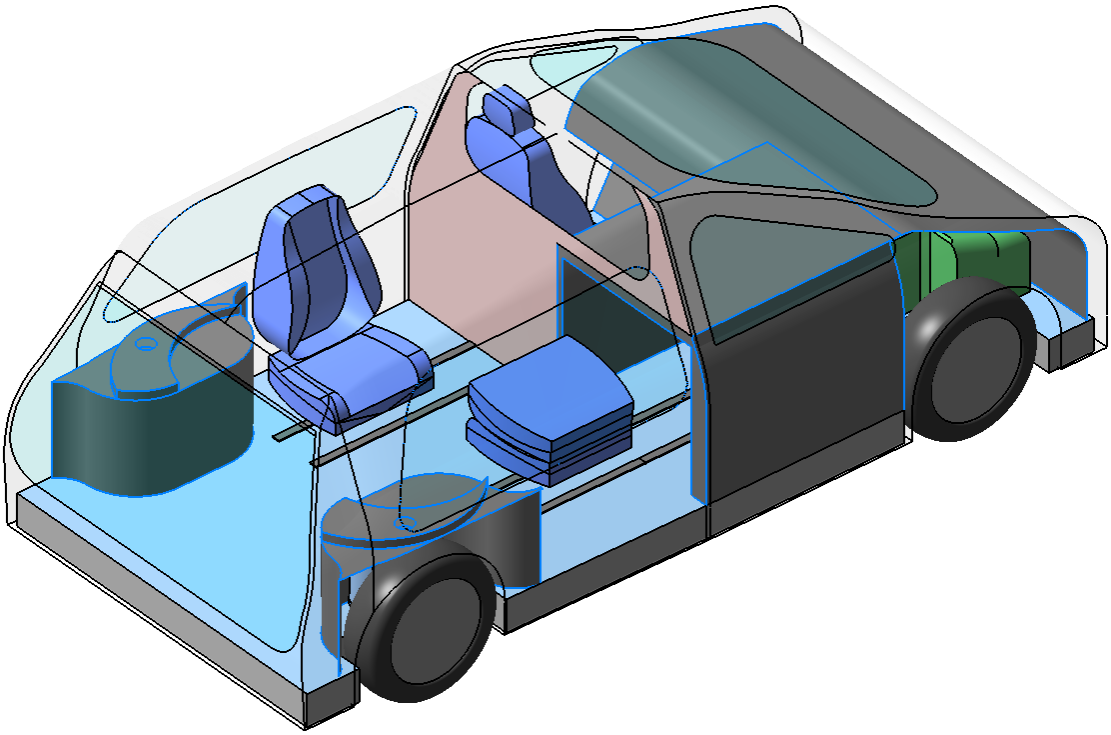

Figure 8.6: Opening of special boot

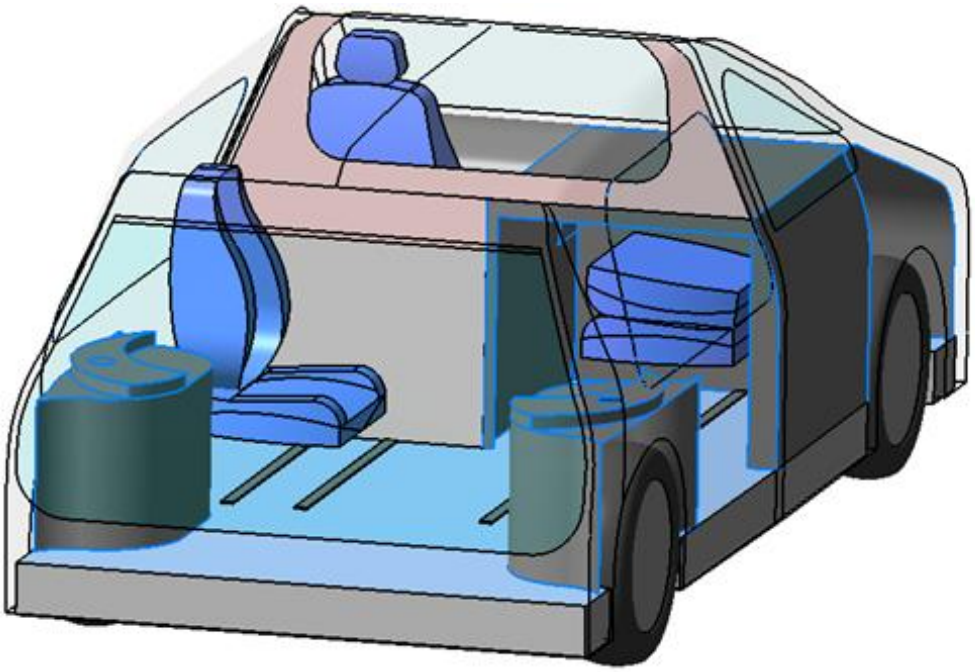

Figure 8.7: Right seat folded inside the boot

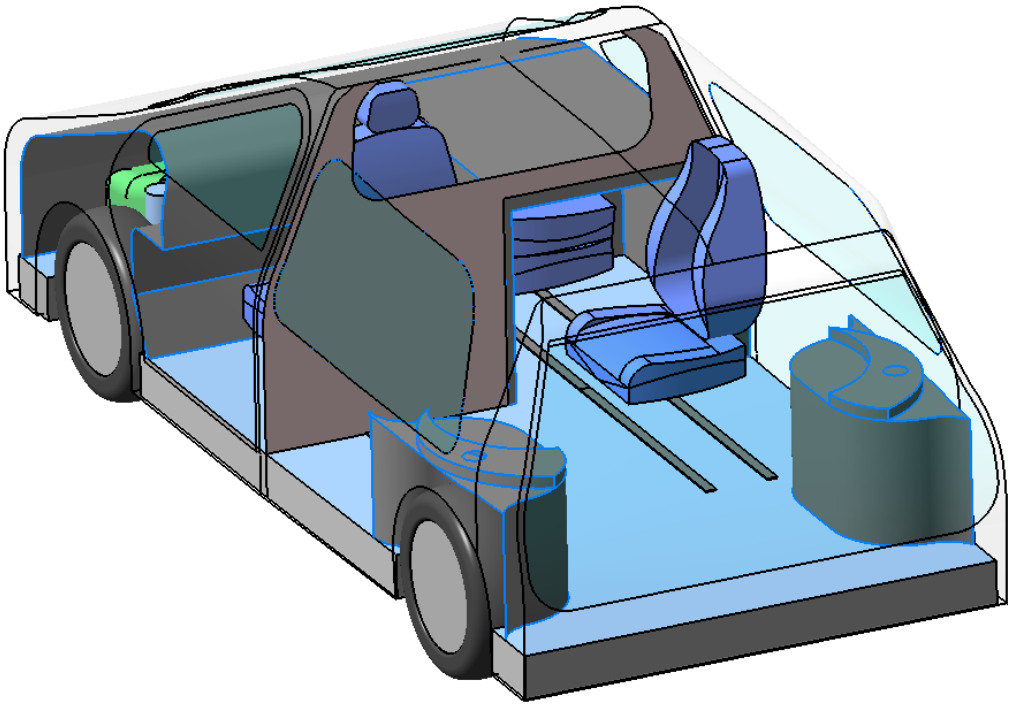

Figure 8.8: Left seat in right rails thanks to change of its applicator

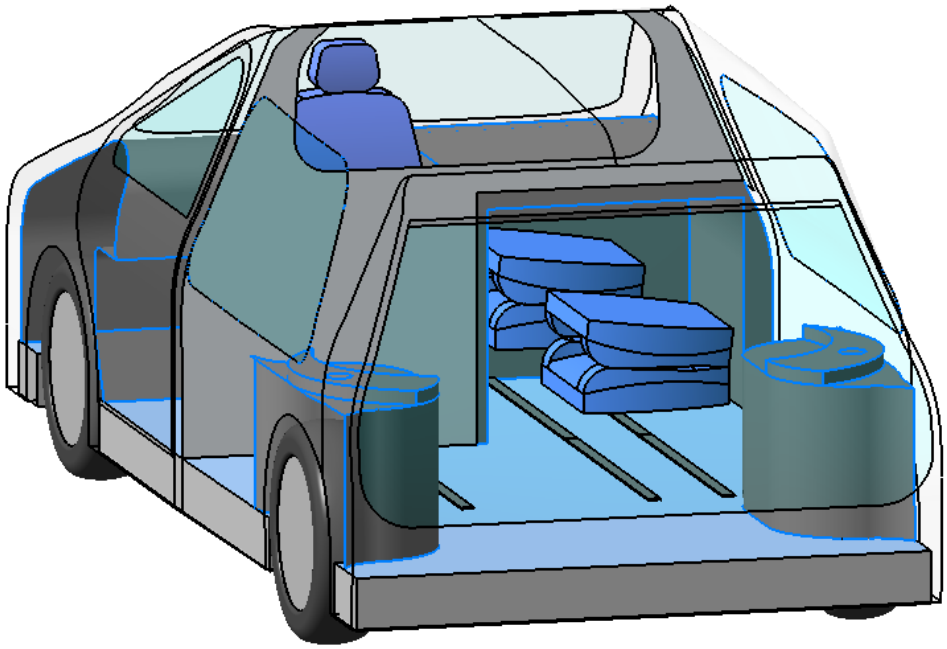

Figure 8.9: Both seats folded in right rails.

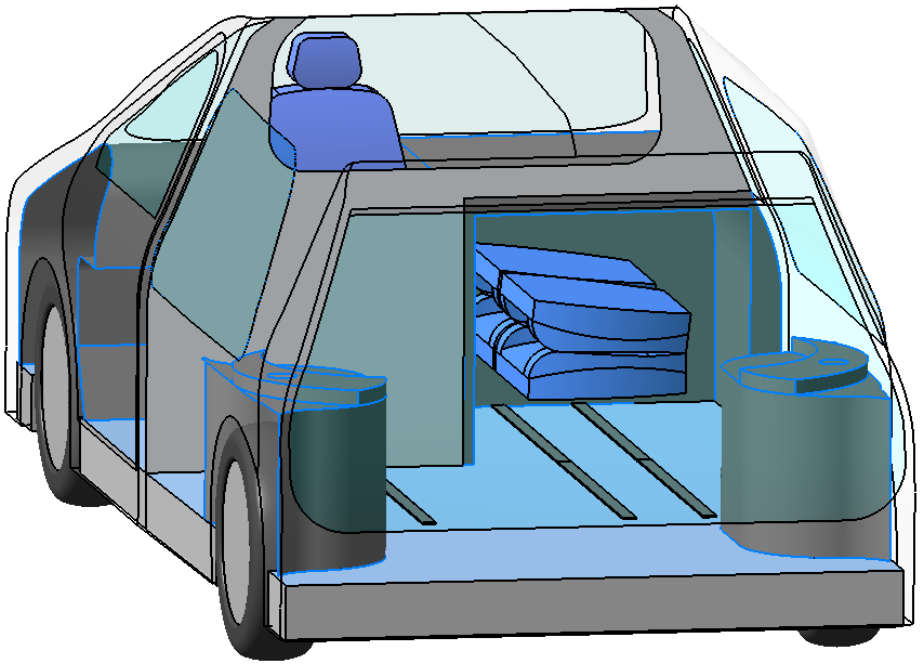

Figure 8.10: Both seats inside the boot

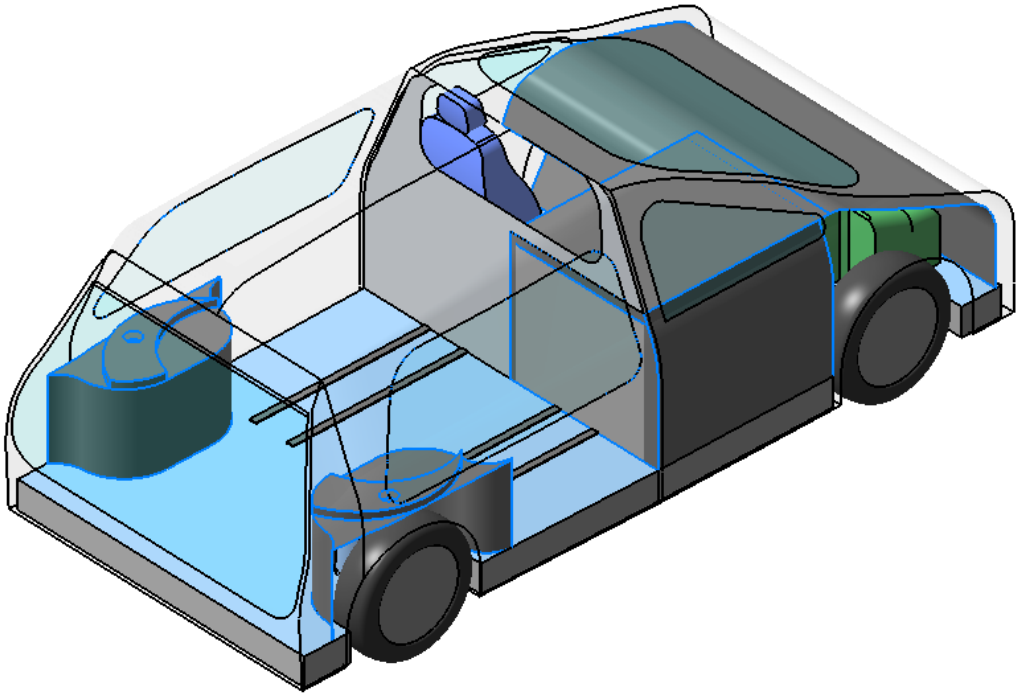

Figure 8.11: Space reserved for wheelchair.

Special zone for wheelchairs

The longitudinal plane of the special zone for wheelchairs must be parallel to the longitudinal vehicle plane and the floor must be anti-slip. In Figure 7.16 the space that must not be occupied for the other seats are showed.

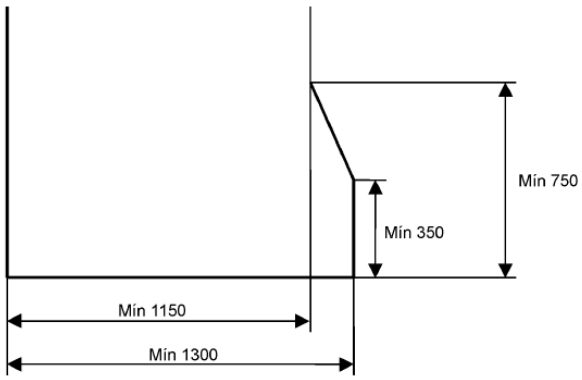

Figure 8.12: Minimum space for passenger in wheelchair. [3.9]

Elevator and door

At least one door must be installed for the exit and enter of passengers. This door needs an auxiliary mechanism of ascent and descent whit a switch. Any control which initiates the lowering or rising of somebody from the road surface, must be clearly identified and be under the direct control of the driver. Access doors for wheelchair must have a minimum height of 1400 mm. In our case there is no problem because our size is around 1600 mm. The minimum width of all doors providing access to wheelchair vehicle shall be 900 mm which may be reduced by 100 mm. In our case we have almost 2000 mm. Raising or lowering may stand and immediately reversed by a control, both within the reach of the driver inside the taxi, and also adjacent to any other operating controls provided for the operation of the inclination system.

Regarding elevators, these must be able to operate only when the vehicle is parked. When raising the platform and before beginning its descent, it should automatically start up a device to prevent the wheelchair rolls off the platform. The lift platform should have a minimum width of 800 mm and a length of 1200 mm, and can operate with a mass of 300 kg. If remote control is not pushed, it will automatically return to the off position. When it does so the movement of the lift shall immediately be stopped and it must be possible to start a movement in either direction. A safety device protects areas that are not sighted by the taxi driver, and that must protect zones where could be crushing. While the security device is working, the elevator movement must stop immediately and starts the opposite movement. When the elevator is situated near the door in the visual field of the taxi driver, it will be activated by the driver from him/her seat.

In following figures we can see the elevator system. Figure 8.13 represents the initial position. There is space inside, on top of the battery for the elevator and its system. In Figure 8.14, 8.15 and 8.16 the tree positions are showed. The first one is when the electrical system takes out the elevator. Afterwards this one is situated at the floor height to, finally, rise the elevator at the inside vehicle floor.

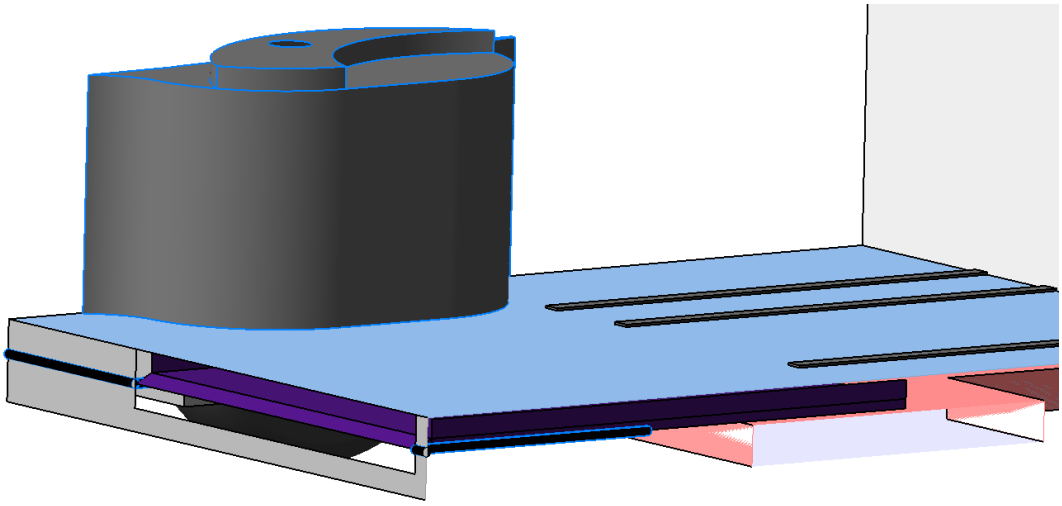

Figure 8.13: Elevator in position 0. Inside the taxi.

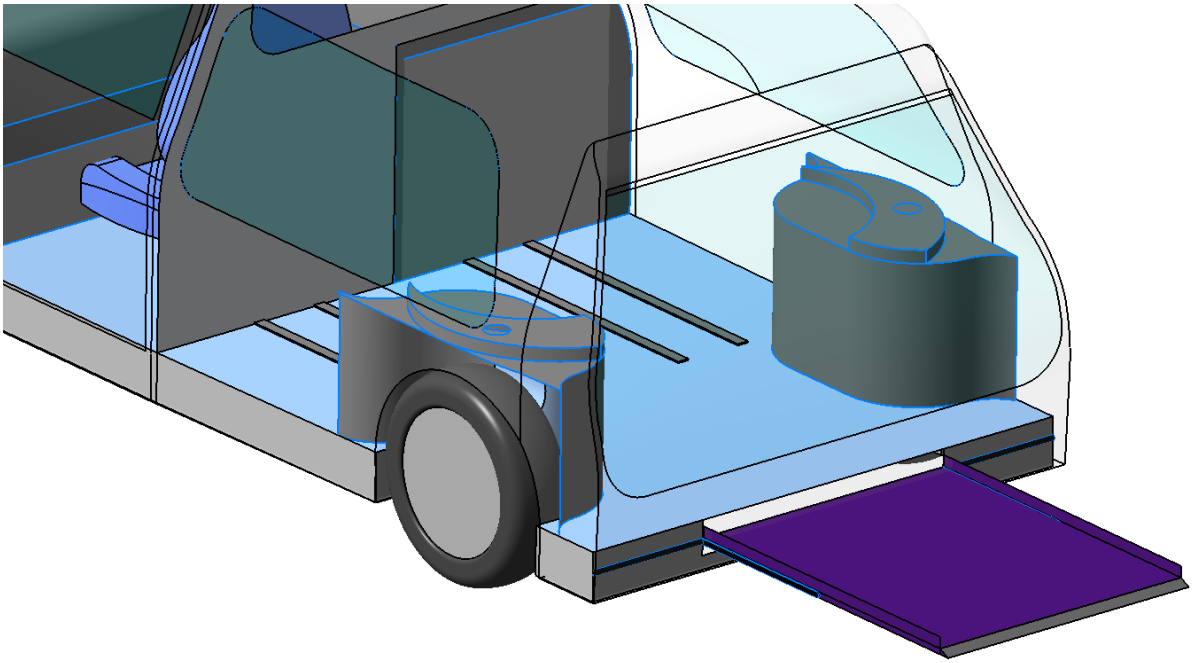

Figure 8.14: Elevator in position 0. Outside the taxi.

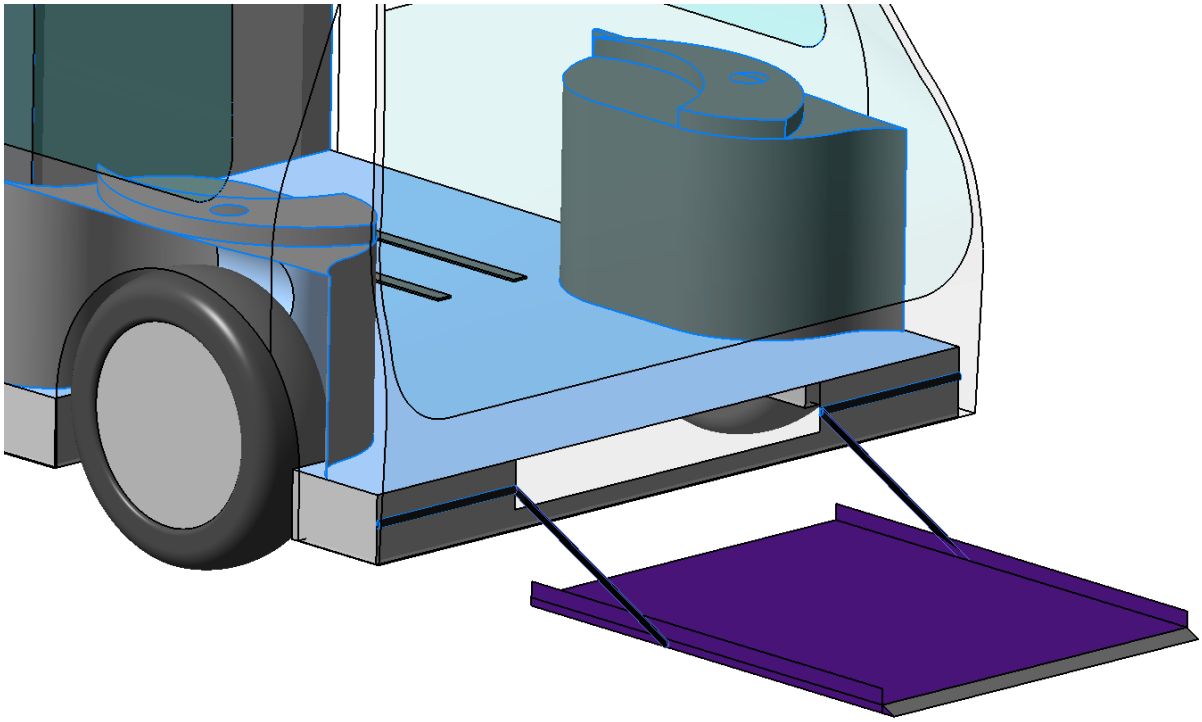

Figure 8.15: Elevator in position 1. Access for wheelchairs.

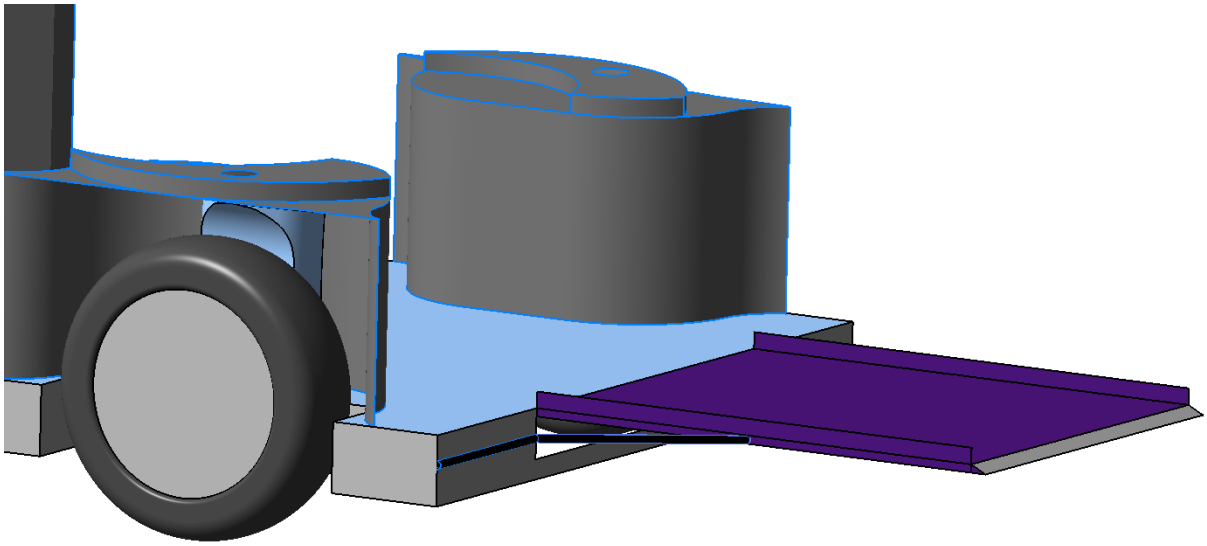

Figure 8.16: Elevator in position 2. Maximum Height.

Special areas for wheelchairs will be accessible from outside with the follow sizes: Length 1200 mm, width 700 mm and height 1090 mm.

Foldable seats

Foldable seats will be installed in the area for wheelchairs as we saw in the pictures. When a disable person does not need our service, this seat will be unfolded for a conventional use. These must be easily retired by the driver. In our case we do not have any problem with this due to our taxi is fitted with a special system and the alternative boot. [3.9]

More specifications

Regarding communication devices, these must be in the zone for wheelchairs between 700 and 1200 mm on top on the floor. The remote control must be used with the palm of the hand and will be of contrasted colours. In our case, since we have an elevator, a communication device connected with the driver must be installed near the door at a maximum height of 1300 mm from the floor. We can find this in section 3.3 of [3.9].

Vehicles equipped with a space for wheelchairs must have pictograms visible from the outside, both on the front nearside of the vehicle and in the access door. Appropriate pictograms shall also be placed inside adjacent to space wheelchair.

Seat belt

Owing to our taxi is adapted for disable people we do not have to forget that the security on this occasion is completely different. Due to we are in M1 category and given our inside distribution, the system of seat belt is “Fastening seat belt wheels, 4 points tensioner eccentric”. It is showed in the Figure 8.17. In Ancra catalogue [2.11] it appears with the number of reference 79887. Thanks this dispositive, we do not need affix the seat belt to the lateral walls. We just we need one rail more in the floor.

Figure 8.17: Securing the wheelchair [2.11]

We can see in section 3.8.2 [2.9] about stability of wheelchairs that a space for them must be provided with a restraint system. It is appropriate for wheelchairs in general and allows the transport of them. These features are for a passenger who is sited looking to the front. A space for wheelchair shall be provided with a restraint system for passengers, comprising at least two mooring points and a restraint of the pelvis (lap belt) designed and built with components that have a similar behaviour to the belt up under Directive 77/541 / EEC.

Any restraint system fitted to wheelchair must be deactivated quickly in case of emergency. Finally, any restraint system wheelchair should achieve with dynamic test requirements and be securely attached to vehicle mooring fulfil the static test.

9. Design

In this section we are going to see in detail how our taxi has been designed. The aim of this project has been optimize the space and try to reduce the normal taxi size in Medellin. Although the taxi is designed in Germany, it will be built in Colombia, so we should keep it in mind regarding materials and process. In Medellín we have a source who works in the Engineering field and know about these issues. Nicolás Suarez specifies that in terms of materials and manufacture depends on which material you are going to build. In the event that steel is chosen, this material is found relatively easy and the process to build it as well. In terms of Aluminium, not structural Aluminium is achieved, there would be imported and there are difficulties in production, but there are some companies that do it. If we would like to work with compounds depends greatly on the material and process, few companies manufacture pieces in composite and in the case you would like to do the process manually, raw material has not highly quality. There is a decent Fiberglas assortment, also we would have to import it, but depending on the materials could be easily imported in any local suppliers.

9.1. Aerodynamic and materials

Having in mind the former, our options are limited by supply and manufacturing processes. As it is known, there are two routes to reduce the energy used to move a vehicle. The first one is improving the engine efficiency; we did it with our electrical motor. The last one is reducing the weight and improving aerodynamic. We can reduce the weight of the vehicle by using lighter materials.

Undertray Aerodynamic

Our two different defined planes are limited by the floor of the taxi between the rear edge of the front wheels and the front edge of the rear wheels. The surface of the floor in these planes must be lying in a smooth plane, rigid and impenetrable.

A diffuser section is used to decrease the pressure under the car, downstream of the front edge of the rear wheel, and consequently generate downforce [1.4].

Reminding ground effects, theoretically we have two points (a), which is out in front of our taxi and (a') behind. In (a) we have the trace of a single molecule of air; its progress must be constant. In (a') the air must return to the same condition of (a). Nevertheless, that does not happen in real world. We can see in Figure 9.1 the graphic of the velocity of our air molecule as it approaches and passes through the tunnel. In this figure we can observe that the air decelerates as it comings nearing the stagnation point; it accelerates as it passes around the nose and into the nozzle for then, decelerates effortlessly. Besides in Figure 9.2 we can observe that the area of negative pressure exceeds greatly the area of positive pressure, so earn lifting our taxi by our pushing [1.3].

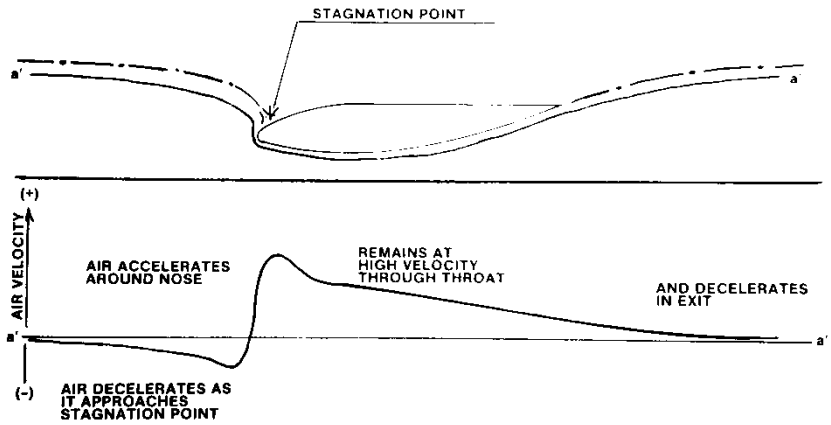

Figure 9.1: Air velocity along streamline passing through ground effect tunnel. [1.3]

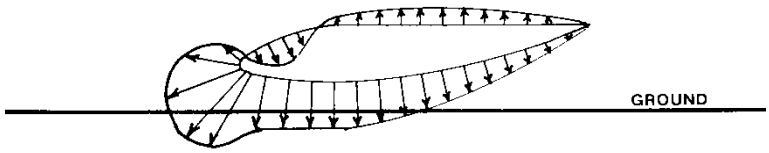

Figure 9.2: Idealized air pressure distribution around ground effect tunnel. [1.3]

Undertray and bodywork produce around 40% of the total downforce. Mainly the body of the vehicle could be thought of as a cliff body adjacent to the ground, with a large wake and associated aerodynamic resistance form. Generally, improving the design of diffuser and producing lower pressures under the car does not lead to an increase in drag and thus the origination of downforce by the body of the taxi is normally the solution to an aerodynamically profitable vehicle. [1.4]

Aerodynamic shape

Due to the external shape of this taxi is similar than VW e-Up, approximately our aerodynamic coefficient is of 0,308. This number is in the normal range of aerodynamic. Thanks we do not have more than 2 doors; the driver door and the door for passengers at the back, the number of 0.308 could improve owing to there are fewer disturbances. In this project we will not see in detail aerodynamic shapes, our main aim is focus on internal distribution and functionality; nevertheless this design respects the basic norm in aerodynamic regarding width. As we can see in Figure 9.3 and Figure 9.4, the front width is bigger than rear width. That is because we need less area on the back to reduce the wake in this zone and, thus avoid the effect of suction.

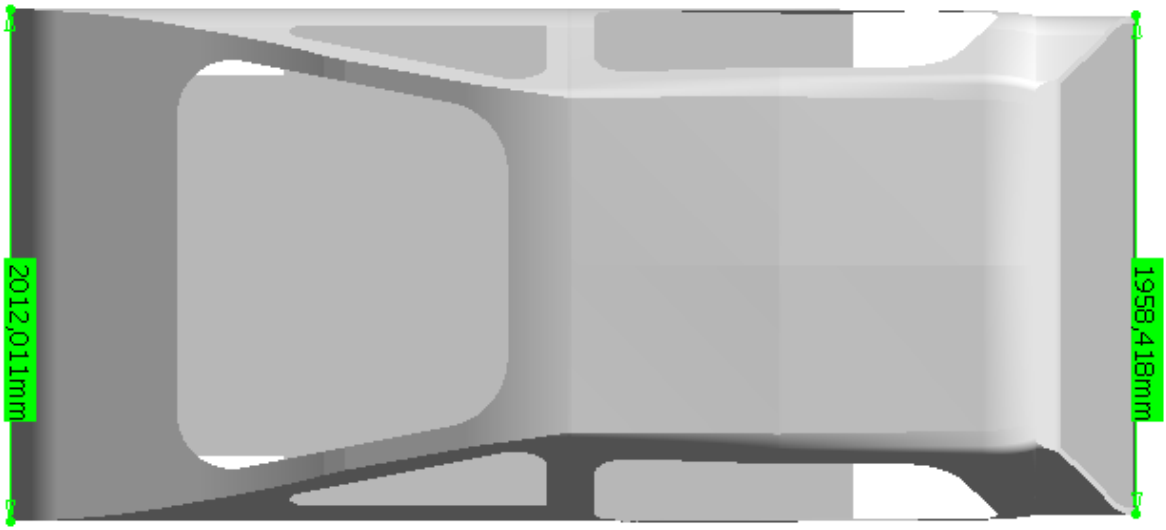

Figure 9.3: Width of front part and rear part.

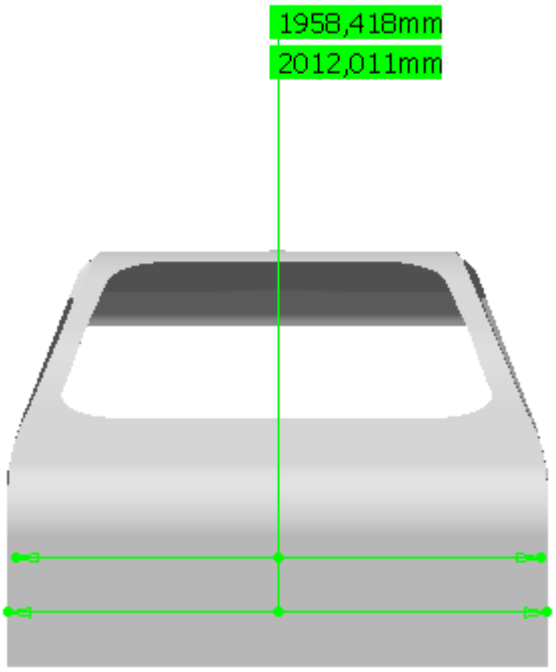

Figure 9.4: Width of front part and rear part front view

Materials

Observing other electric vehicles, there are studies to find the material best suited to increase battery life. It should be a material which can store electricity and be part of the full body. According to some studies, it may be a compound derived carbon fibre whose characteristics are the lightness and electrical storage capacity, faster than lithium ions. Meanwhile Aluminium is used by manufacturers and prevents corrosion, conducts electricity adequately and produced in thin sheets provides a simple malleability. With this material, roof is constructed often. Other material used in vehicle manufacture is Kevlar. This is a polyamide synthesized.

In body panels we can find the biggest potential weight saving. This is the 60% of the weight of the vehicle. In the Figure 9.5 candidate materials are given. We might evaluate the possible weight saving just replacing a steel panel with an Aluminium-alloy or fibreglass one of equal thickness, it means giving a weight saving which scales as the density. Both have much lower modulus, and thus will deflect far more.

Material	Density $\rho(Mg\,m^{-3})$	Young's modulus, $E(GN\,m^{-2})$	Yield strength, $\sigma_y(MN\,m^{-2})$	$(\rho/E^{1/2})$	$(\rho/\sigma_y^{1/2})$
Mild steel	7.8	207	220	1.32	0.53
High-strength steel			up to 500		0.35
Aluminium alloy	2.7	69	193	0.66	0.19
GFRP (chopped fibre, moulding grade)	1.8	15	75	0.73	0.21

Figure 9.5: Properties of candidate materials for car bodies [1.5]

Fiberglas offers potential weight savings of up to 3 times on steel. This saves at least 30% on the weight of the taxi. In [1.5] we can find mainly features like the price per ton (60% cost of material and 40% cost of production): 1711.45 - 3949.51 €. Young module is between 35 - 45 GNm^{-2} and density is between 1.55 – 1.95 Mgm^{-3}. Toughness values are between 40 and 100 kJ/m^2 and fracture toughness is between 42 and 60 $MN/m^{3/2}$. Regarding softening temperature is 340 K. It is really good creep resistance above 60°C creep-rates. Comparing steel and fibreglass regarding corrosion, the last one is much more corrosion-resistant of loss of section. In the table 23.4 of [1.6] about relative cost for various engineering materials, we can see that fibreglass and the wood are one of the more economic solutions. Relative cost is the ratio of prices per unit mass of the material and the low carbon steel. While Aluminium has 10 and Carbon fibre 45 fibreglass has 6.5. Due to the limitation of the fibreglass in terms of stiffness, nylon matrix reinforced with fibreglass is extremely strong and impact resistant. Due to in Colombia there is quite assortment, most of our pieces will made of fibreglass to reduce the weight.

Comparing Aluminium with Carbon fibre, this last has a Young module between 390 GNm^{-2} (Aluminium 69) and density is between 2.2 Mgm^{-3} (Aluminium 2.7). Toughness values are between 5 and 30 kJ/m^2 (Aluminium 8-30) and fracture toughness is between 32 and 45 $MN/m^{3/2}$ (Aluminium 23-45). Despite of Carbon fibre compared to the steel is 50% lighter; this is over the top expensive. Nowadays the price of Aluminium in Colombia is 1.269,02 €/T while the price of Carbon fibre (3K Plain Wave for example) is 160.921,20 €/T.

Summarizing, our taxi will be made of Aluminium for the body and majority of elements of fibreglass. In Figure 9.6 we can see the body made of Aluminium. The area of this is 22.385 m^2

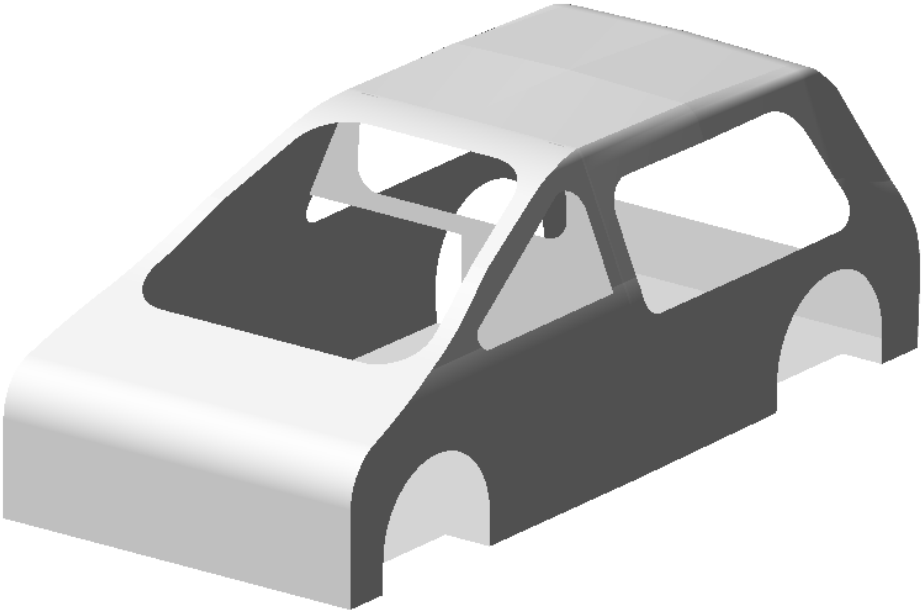

Figure 9.6: Body made of Aluminium

In our taxi, windows and lamps are made of polycarbonate sheets. Regarding polycarbonate, in [1.5] about engineering materials, we can find the following vales: the price per Ton in 1994 was 3613.89 - 4204.76 €, Young module is 2.6 GNm^{-2} and density is between 1.2-1.3 Mgm^{-3}. The softening temperature is 400 K. Mainly polycarbonate has properties of transparency, impact resistance and ability to withstand temperatures up to 130°C. These are represented in Figure 9.7

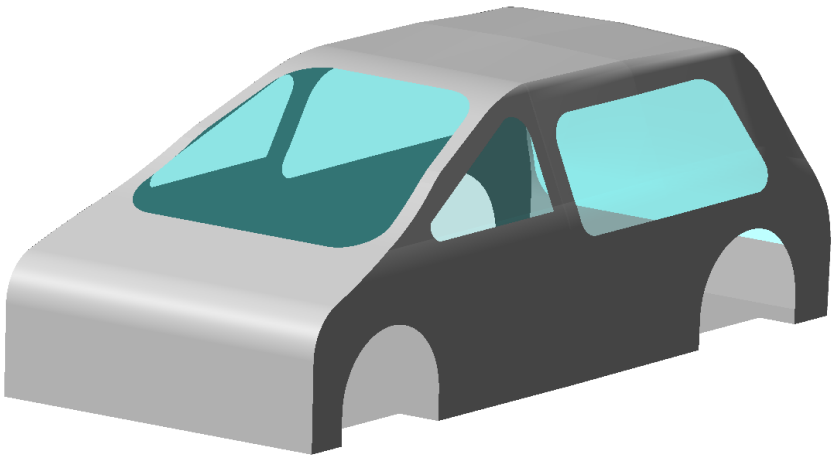

Figure 9.7: Windows of polycarbonate

9.2. Taxi driver

In Medellín there is a serious problem with taxis drivers. The native people do not trust in taxi drivers upon they have to leave the baggage. That is because they use to steal their own customers. For this reason, the taxi driver has a separated inside. Actually the taxi driver has the whole inside, nonetheless he or she has not access to the boot. In this section we could see in detail how the taxi driver space has been designed.

Distribution

The taxi driver inside has only one access door. We do not need other door inside owing to there is no place for other passenger inside but for the taxi driver. We improve the aerodynamic in this way. There is a window dividing the space between driver and passengers. In Figure 9.8 we can observe a global vision.

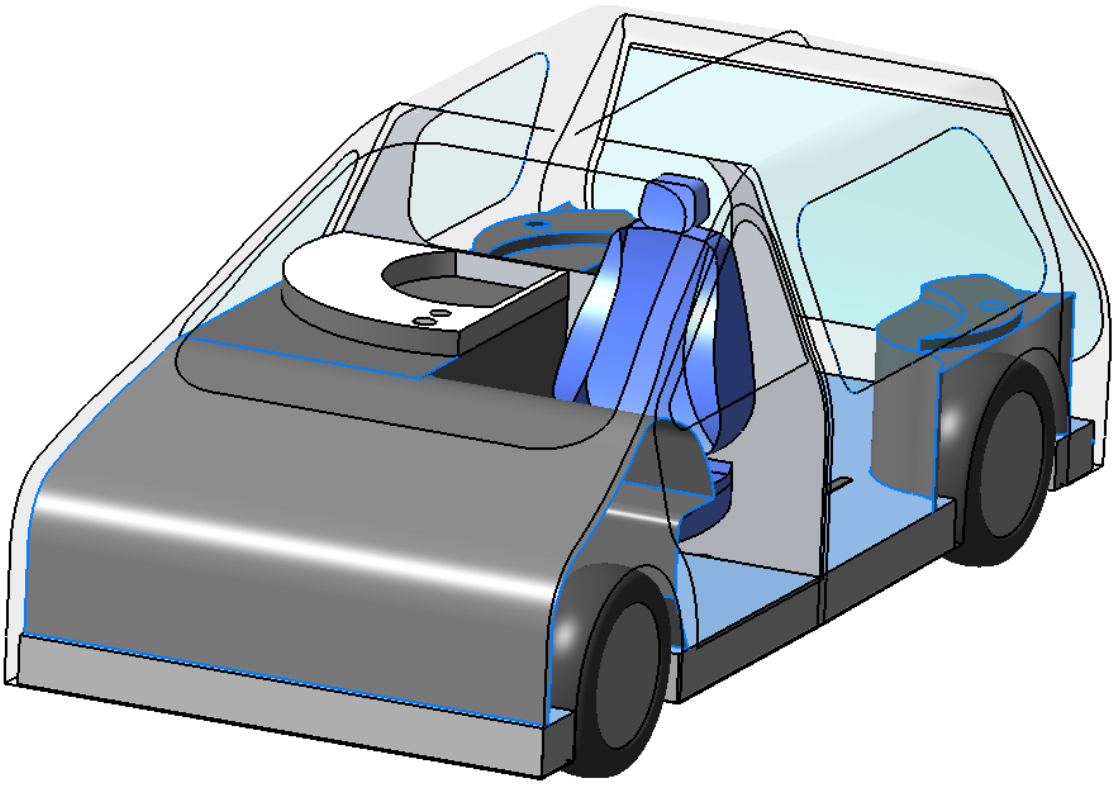

Figure 9.8: Taxi driver space global vision

There is a compartment in the right side to leave the car license and other belongings. We can find two special spaces to hold drinks. In Figure 9.9 we can see it in detail.

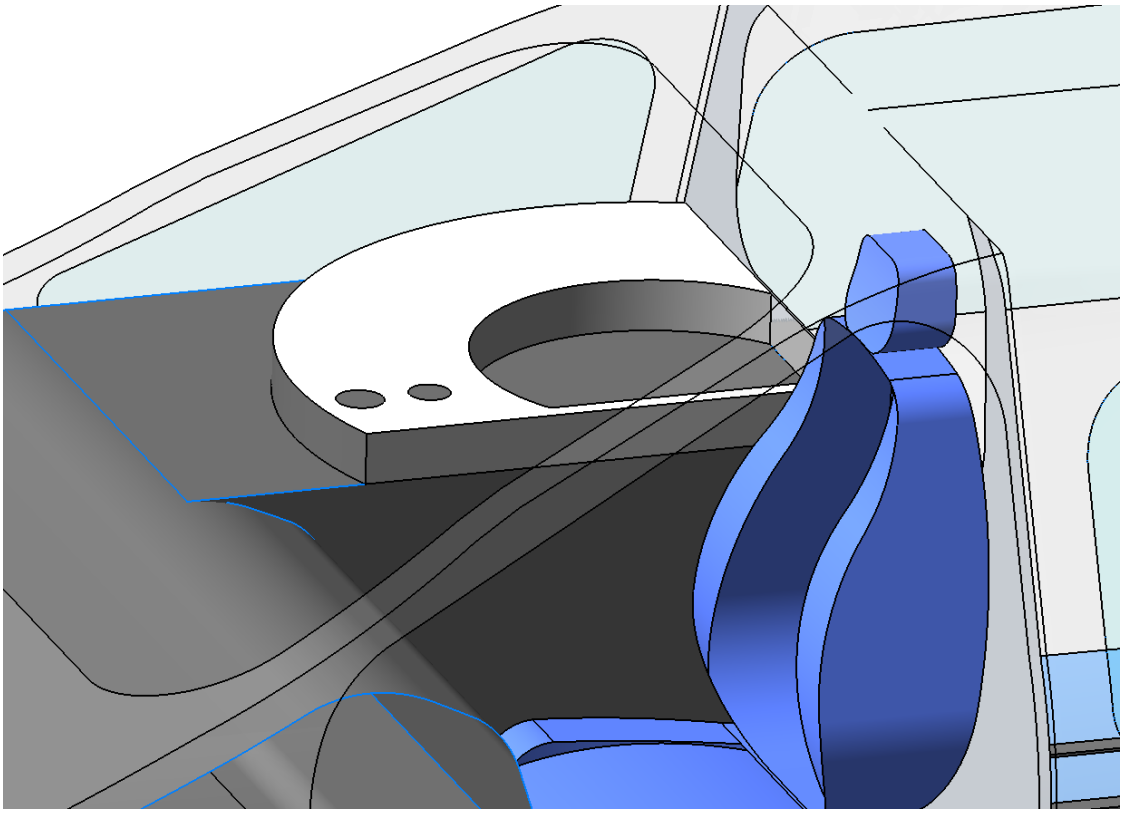

Figure 9.9: Compartment taxi driver

Ergonomic and anthropometry

Our electric taxi is used by Colombian mainly. For this reason we have to keep in mind that the measure is not the same for Colombian than European, for example. We are not going to describe in detail ergonomics, nevertheless any minimal concepts and consideration must be taken into account. We are going to base on percentile 95-man and 5-woman in Colombia. We decide to use these owing to we would like to study the most extreme fact. We can find anthropometric parameters of Colombian working population [2.12].

For women with percentile 5 the height is of 146.7 cm, the weight is 46.7 kg and height eyes seated is 68.4 cm. There are too many measures; nevertheless we are going to see just the most important for our case. For men with percentile 95 the height is of 179.3 cm, the weight is 87.9 kg and height eyes seated is 83.6 cm. We

can observe that the higher size is lower than this one in Europe. In Figure 9.10 and 9.11 there are both percentiles.

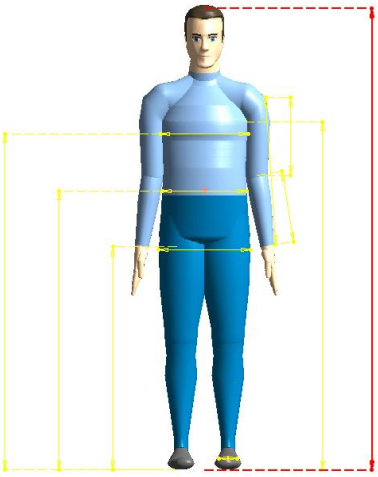

Figure 9.10: Man percentile 95

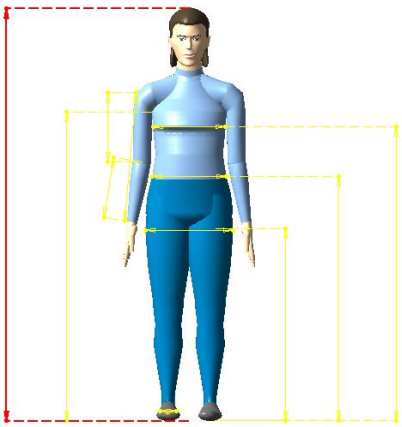

Figure 9.11: Woman percentile 5

As we can see in [1.7] about ergonomics, seats in vehicles must provide comfort for oddly exigent conditions. Generally, vehicles are lower, more spacious, softer and reclined further than office seats. To appropriately distribute the weight passengers, cushioning in an automotive seat is usually designed, and can help them to maintain good posture. Weights against the seat back are largest in the bottom, decreasing with greater height. Loads in the seat bottom are largest in the middle. Weight distribution is somewhat different with comfort seating because of the sizeable seat tilts of about 112 degrees with the floor. In Figure 9.12 we can see the distribution in vehicle seating.

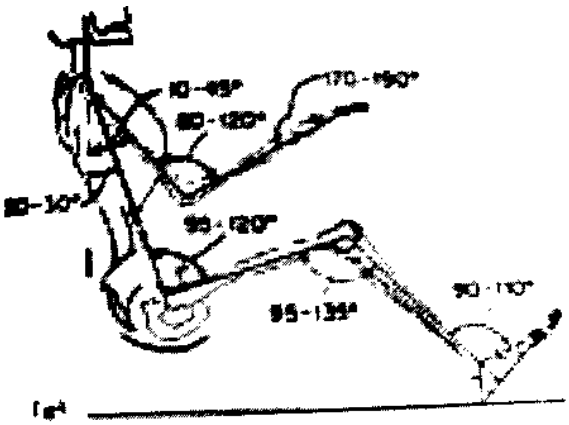

Figure 9.12: Distribution in vehicle seating. [1.7]

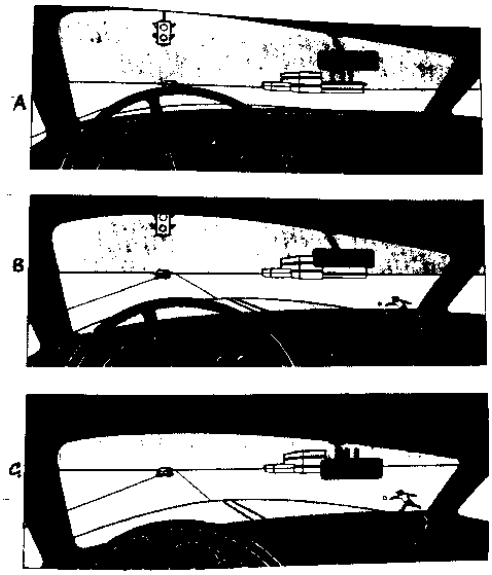

Figure 9.13: Eye positions. [1.7]

We do not have to forget visibility. The design of the visibility is important in terms of prevent visual obstructions from interfering with visibility. This affords an increase of safety and controllability. In figure 9.13 we can observe what happens in each eye position, in picture A the child is unseen; nevertheless in C the traffic light disappear of the view. A is for 5 percentile, B is for 50 and 95 percentile is the last one. Visual field is limited for 95° to the left and right; 15° on either side of the straight-ahead line of sight is the optimum position. In this way, the taxi driver can look at horizon without moving the head. If the visual direction is kept within a cone from straight-ahead line of sight to 30° below and 15° to the right-left; static load of neck muscles could be appear. [1.8]

Finally, in Figure 9.14 the taxi driver in his position is showed. This example is a man of 95 percentile while driving.

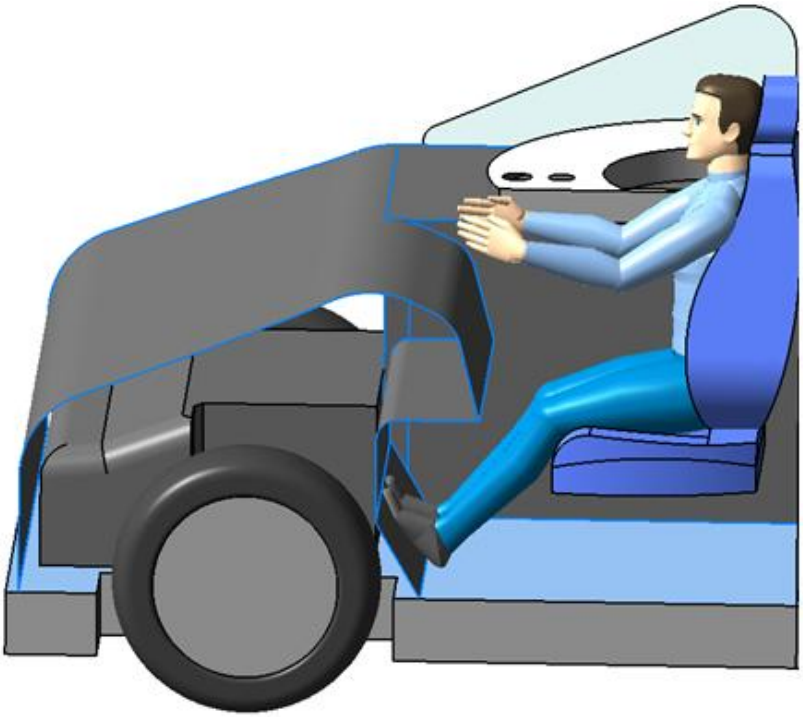

Figure 9.14: Distribution in vehicle seating.

9.3. Passengers

The same study of anthropometry is used for passengers. As we could see in previous section, the disposition of seats is not the usual. We have to be careful with the ergonomic in this case to avoid passenger's uneasiness. This distribution was designed in this way to optimize space and could use the door like an entrance door. We have to see subjectively how people respond to vibration of different frequencies and intensities. Low frequency vibration in the vertical plane (between 0.1 Hz and 0.8 Hz) produces sickness. Principles for minimizing motion sickness could be like: minimize pitch and roll motion with less of 15°, minimize head movements, minimize passive head movements and provide an external visual frame of reference. [1.8]

For this reason there are various options regarding seat positions. In each case the passenger might look out with no obstacles. In next figures we can observe each option regarding tables and rails. In Figure 9.15 one woman of percentile 5 and a man of percentile 95 are sited in one of the possible distribution.

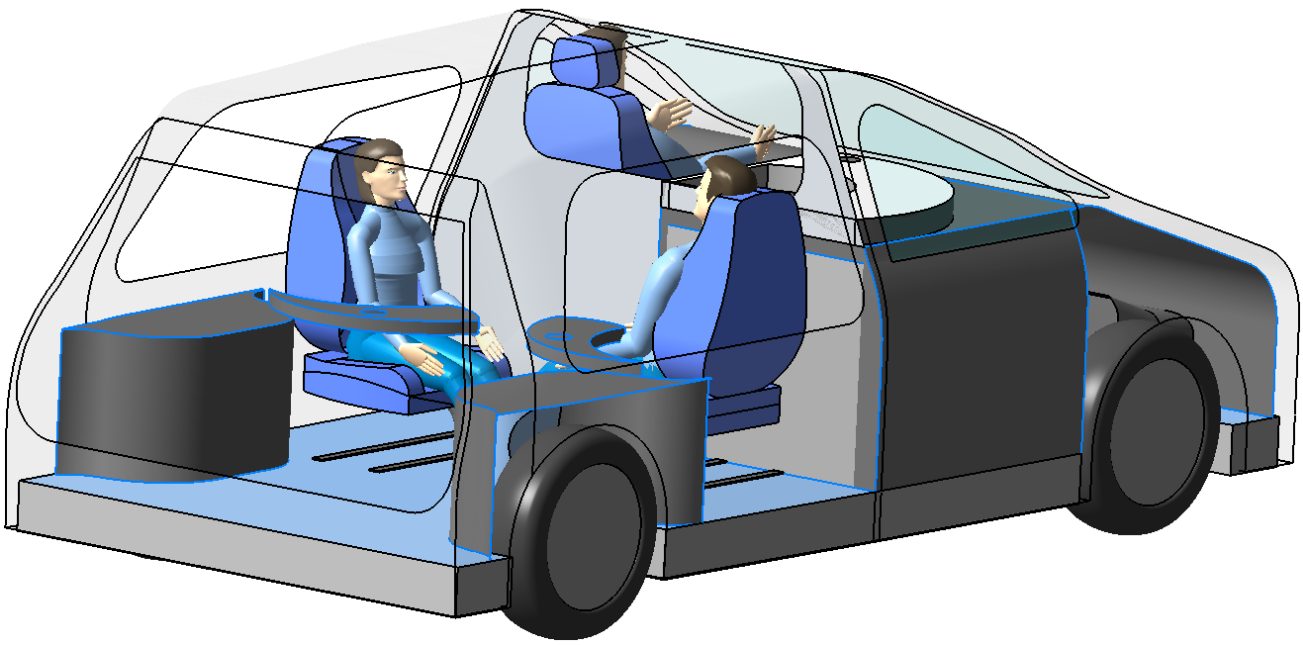

Figure 9.15: Customers in distribution 1

We are going to denominate Position 1 the situation where the right seat is insider and Position 2 will be the opposite. Regarding tables, there are 3 options for each table. Position A, B, C will be explained with pictures later.

In Figure 9.16 Position 1 is showed with tables in position A. That means that our passenger do not want to use the special tables.

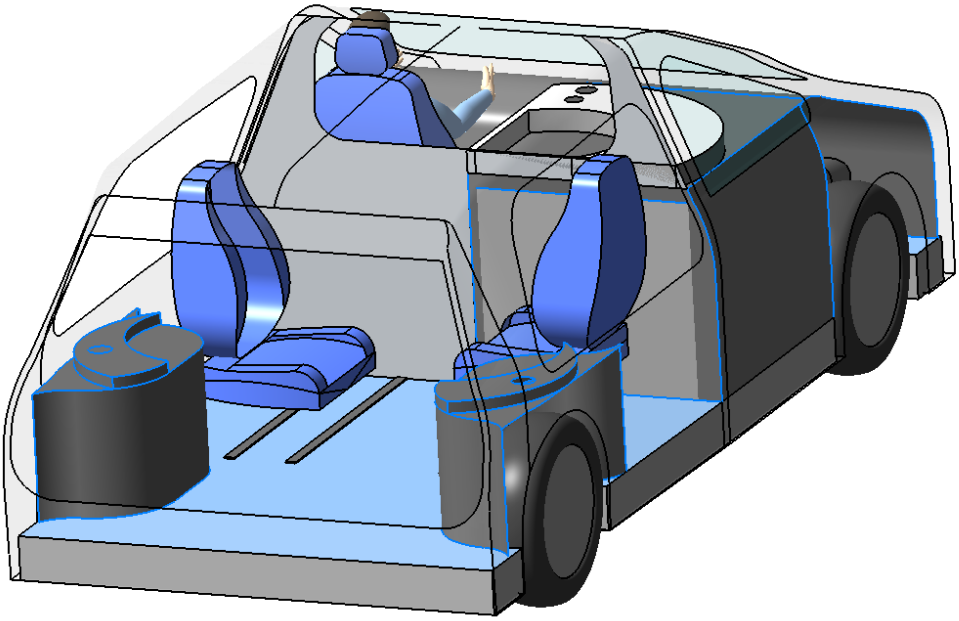

Figure 9.16: Position 1, tables in position A

In Figure 9.17 our customers have decided to use the tables, the right table is in Position C and left table is in position B

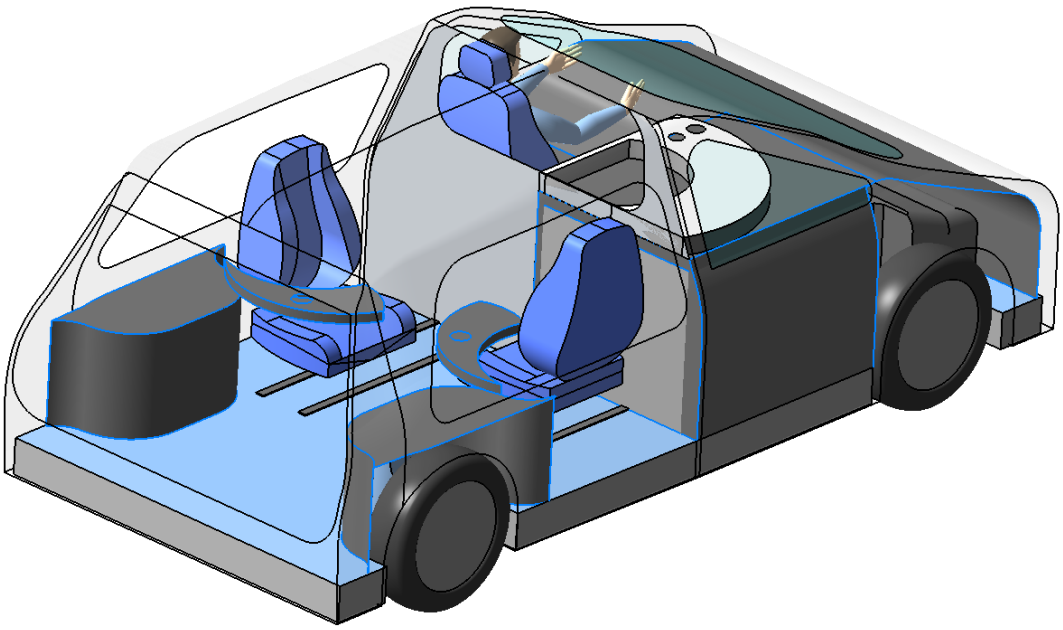

Figure 9.17: Position 1, tables on.

In next picture, Figure 9.18, other configuration is advertised. In this case, the passenger of the right has decided to seat outsider while the other passenger prefers seating insider. This distribution is known like Position 2. For this reasons, tables must be situated in Position C.

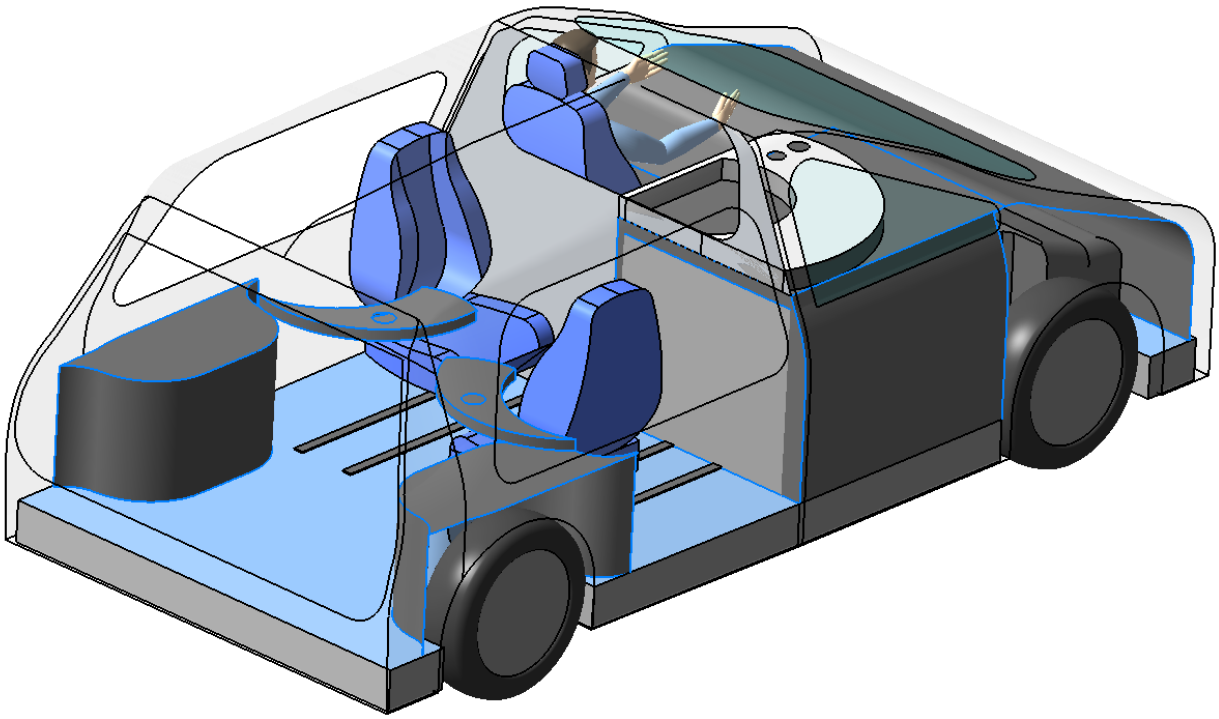

Figure 9.18: Position 2, tables Position C.

Regarding tables we can summarize saying: There are 3 options for each table. Position A is when the table is on the cover of suspension, Position B is when the seat is outsider and the customer needs the table 90 degrees closer him/her and, Position C is when the seat is outsider and the table rotate 120 degrees. The mechanism is a shaft in the cover of suspension which has 3 defined positions: 0°, 90° and 120°. The customer can select it automatically pushing a bottom in the cover suspension. There is the option 4, which is free movement. The table has been designed to leave a drink, use an electronic tablet, read a book. The material of the table is antislip and there are charges to charge mobiles and other devices. In Figure 9.19 we can observe the three possible positions.

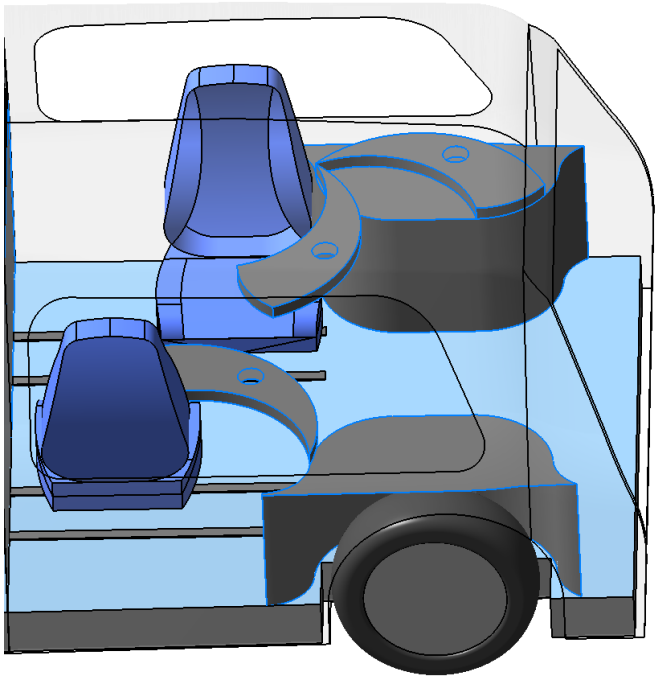

Figure 9.19: Position A, Position B and Position C

As we can see in Figure 9.20, there is enough space for two passengers. We optimize the space and achieve a comfortable posture for both because they are not placed facing each other. We only have to use the rails and select the position of the table.

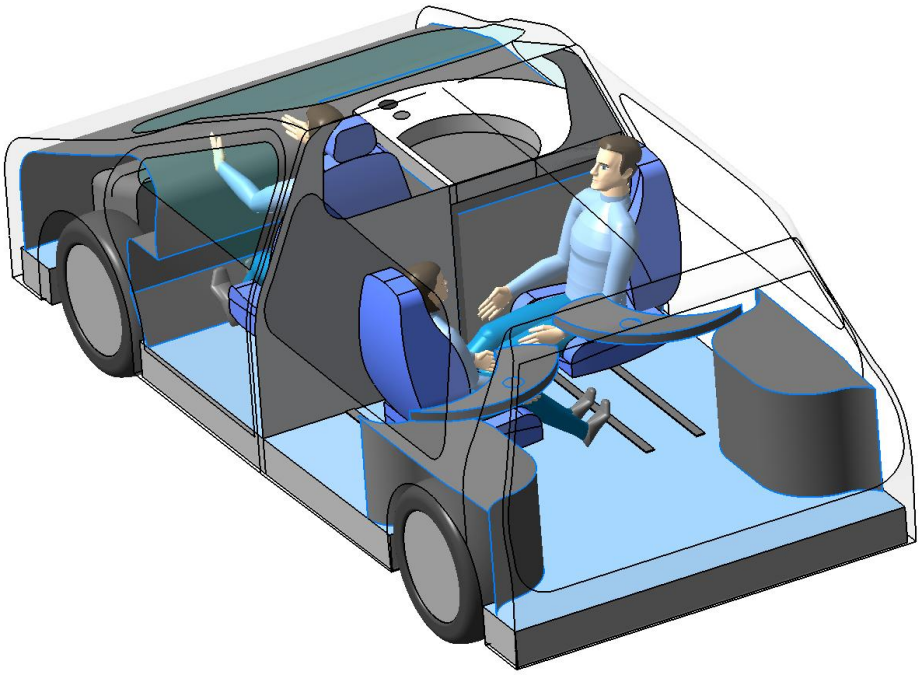

Figure 9.20: Global vision of passenger space.

9.4. Boot

As we said in section 9.1 regarding taxi drivers, we need a special boot to avoid thefts. This boot is special for two reasons. The first one is more than evident: the boot is located in the front side instead of at the rear; this way you can enter into the taxi with a rear-door instead of with lateral doors. Besides, that affords to have a special place for disable people. The system works with electronic mechanism. There is a button in the side that allows the customer to open the door of the boot without effort. The door is automatic and the capacity of the boot is of 4.94 x10 ^{8} mm^{3} as we see in Figure 9.21. The capacity of 494 litres is an amount worthy of consideration.

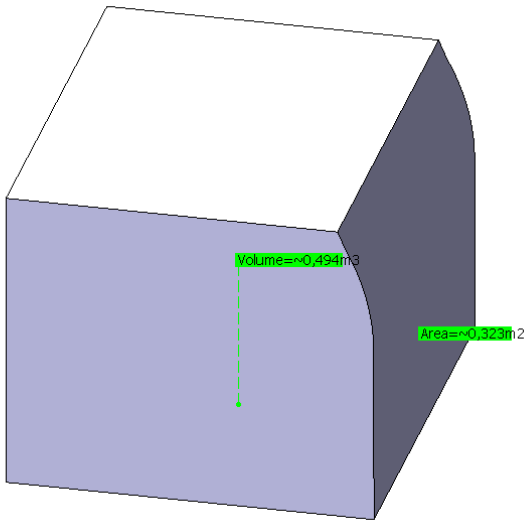

Figure 9.21: Volume of boot

There are too many options with this kind of boot owing to the passengers can manage their own baggage. If the journey is long the customers can hide on seat and use extra space for comfort. The most important thing is that the taxi driver has not access to this place. Besides the boot, there are extra places for leave backpack, handbag and briefcases. In Figure 9.22 the boot isolated together with the dashboard is showed.

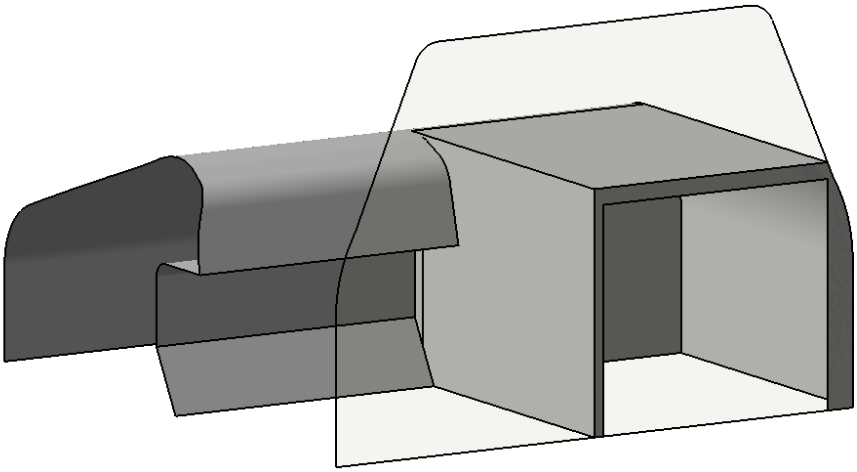

Figure 9.22: Space of boot

9.5. Door

Regarding the door, this new concept of access allows to have less turbulence due to two doors for passengers are omitted. There is a big window made of polycarbonate which is more transparently and allows fit ventilation. The system of opening is provided by a pivot system. The upper edge revolves around an axis and allows the opening. In Figure 9.23 we can see it.

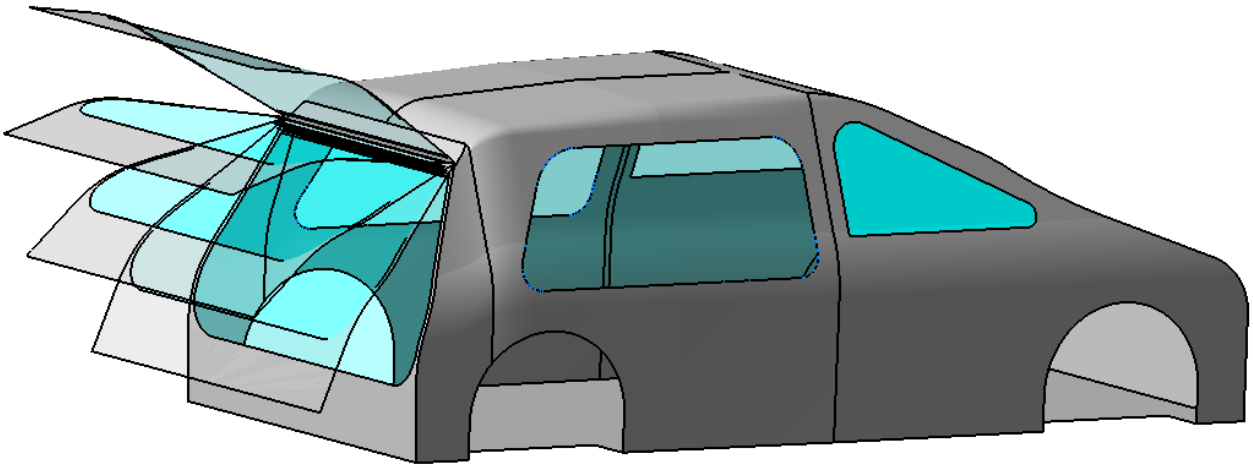

Figure 9.23: Opening system

In Figure 9.24 opened door and closed door are showed. Lateral view is displayed in Figure 9.25 when we can see all how is opened the gateway for passengers. There is no any restriction regarding this kind of doors.

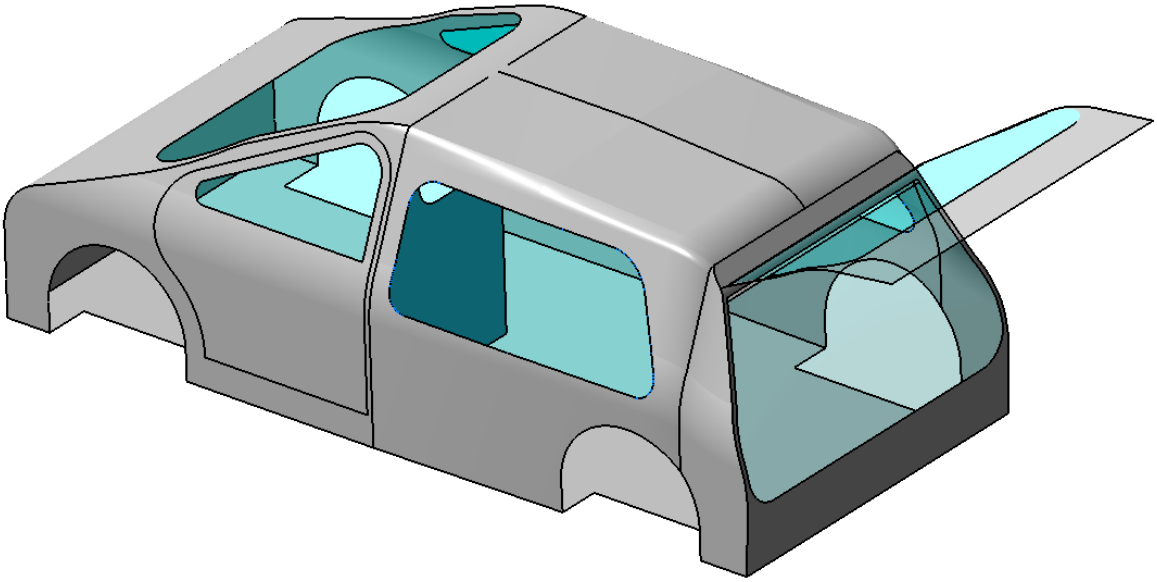

Figure 9.24: Opened-closed door

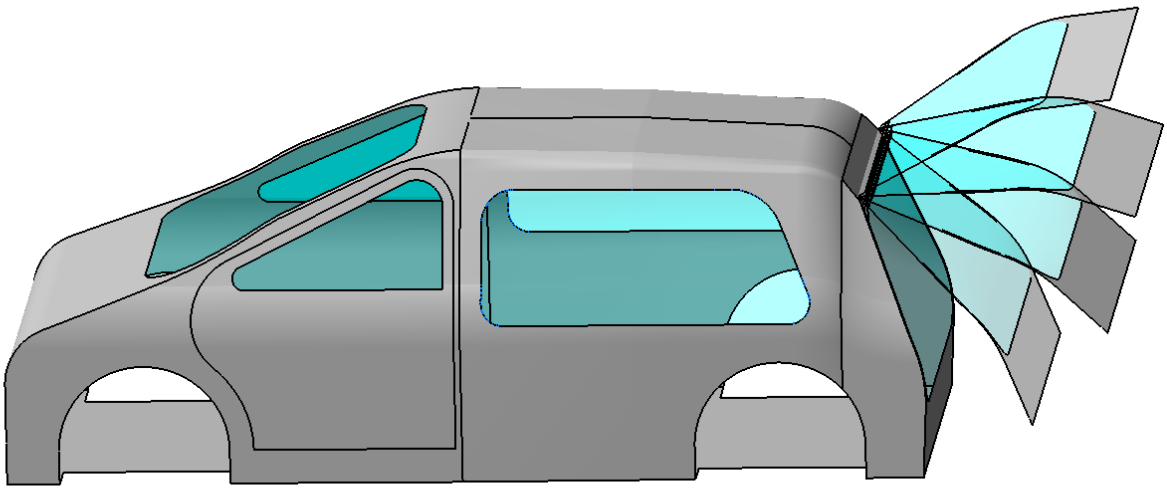

Figure 9.25: Lateral view

9.6. Final design and sizes

Finally, a global view of our electric taxi is showed. We do not have to forget that, as we saw in section 3.3 regarding normative, and due to our taxi is adapted for disable people, we have to paint it green and/or white. "…if these vehicles are affiliated with a company for special services, must be painted of green and/or white".

Summarizing, its measurements are 4398 x 2012 x 1716 mm. These are showed in Figure 9.2 6 and 9.27.

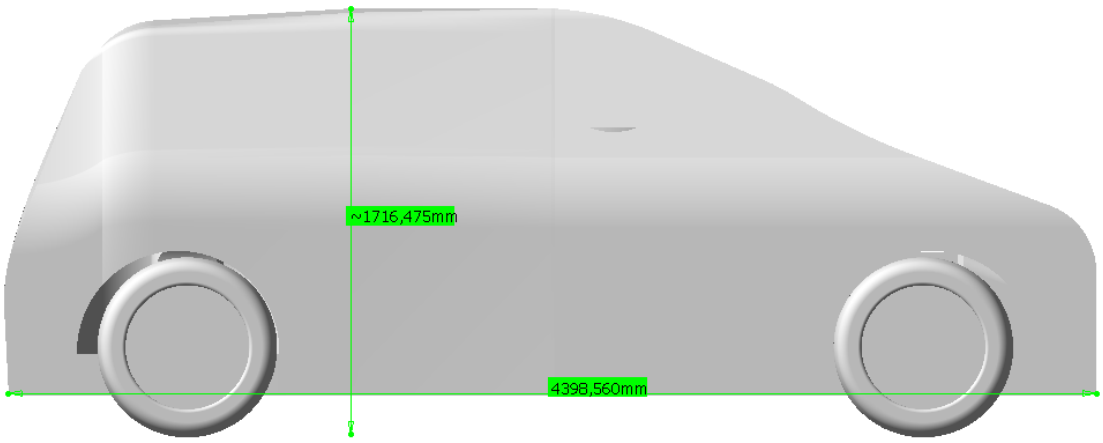

Figure 9.26: Height and length

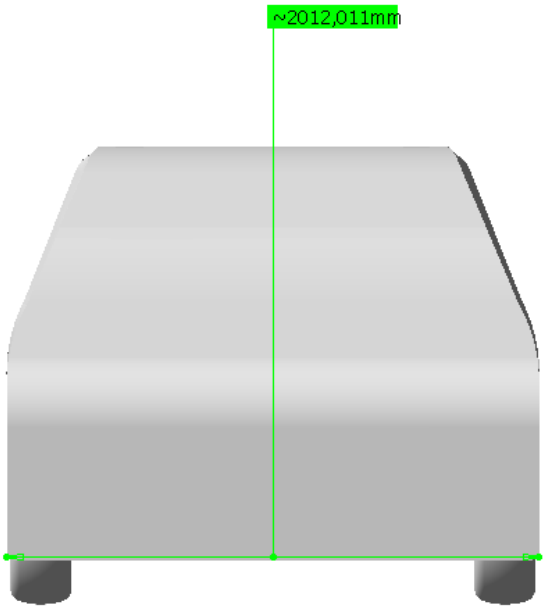

Figure 9.27: Width

Comparing with the alternative in Bogotá, meaning BYD S6, we reduce the total volume in 206,899,134 mm^3. It is certain that our taxi is wider (2012 mm against 1855); nevertheless we need this extra space due to our passenger distribution. Other two dimensions were reduced in our design. We can see right and left side with and without view of the inside in Figure 9.28, 9.29, 9.30 and 9.31.

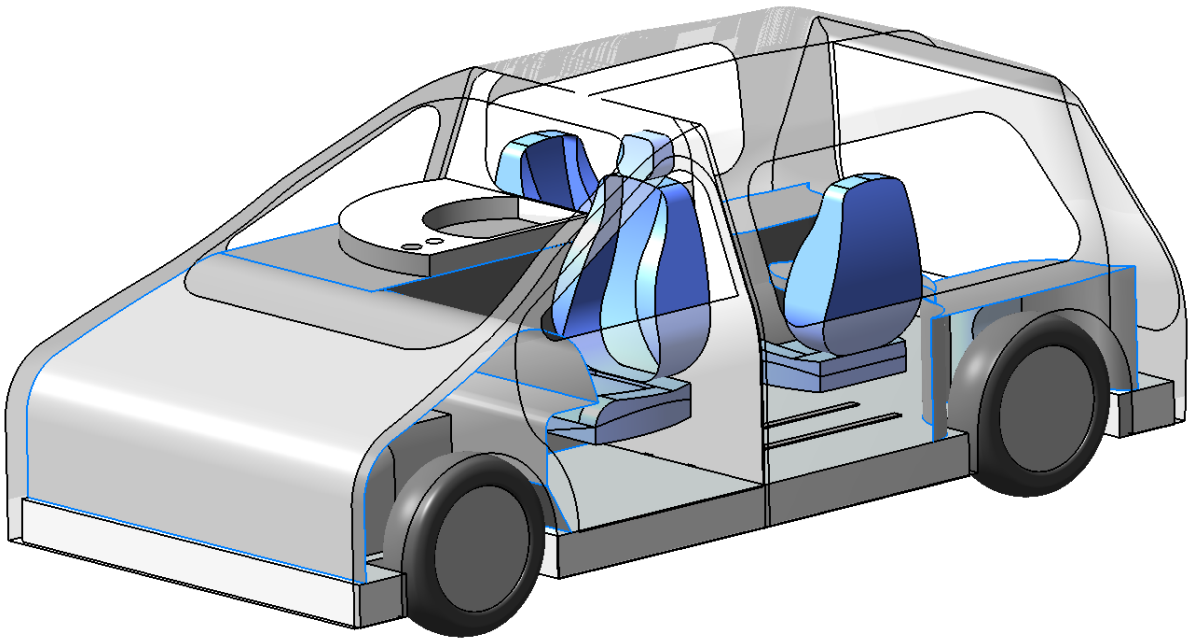

Figure 9.28: Left side with details view.

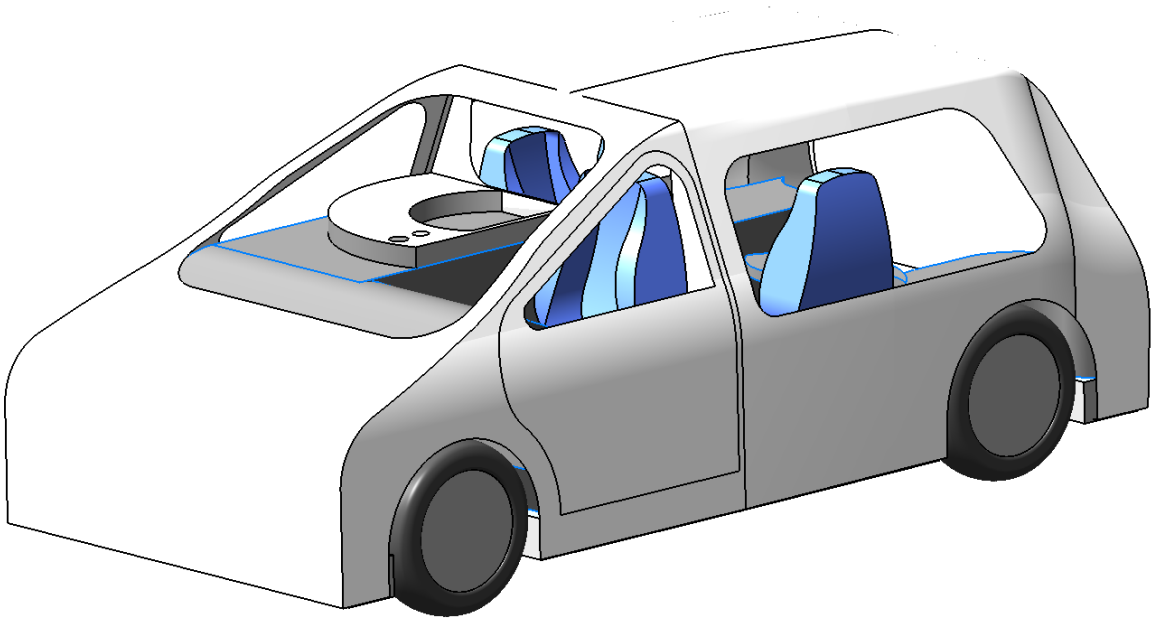

Figure 9.29: Left side without details view.

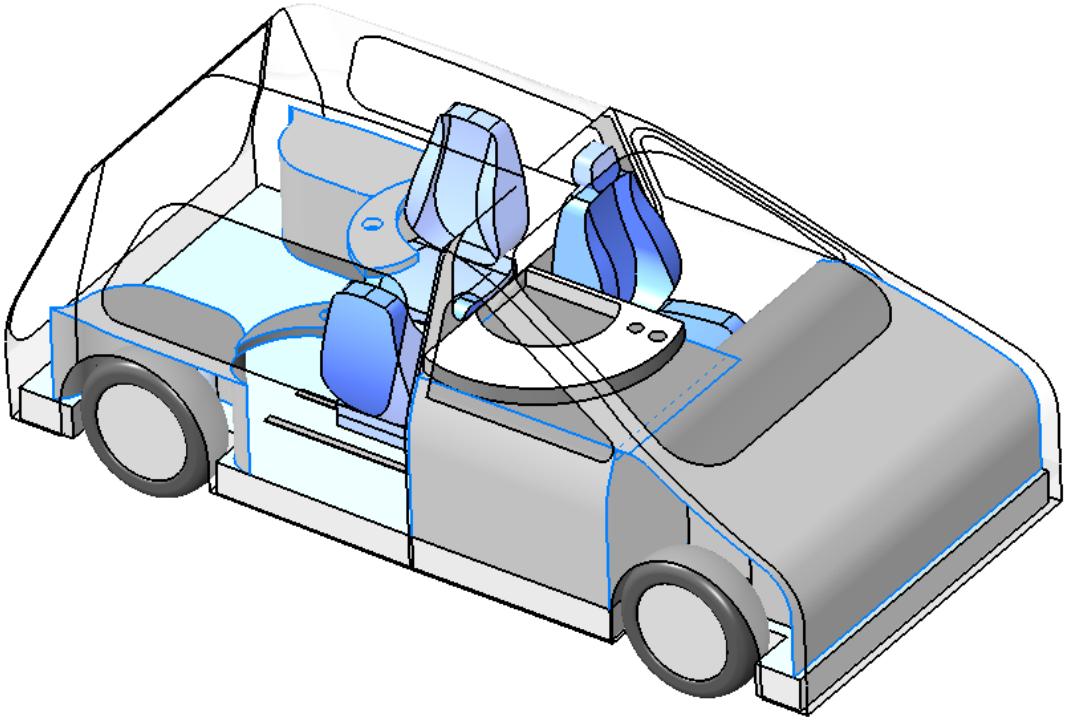

Figure 9.30: Right side with details view.

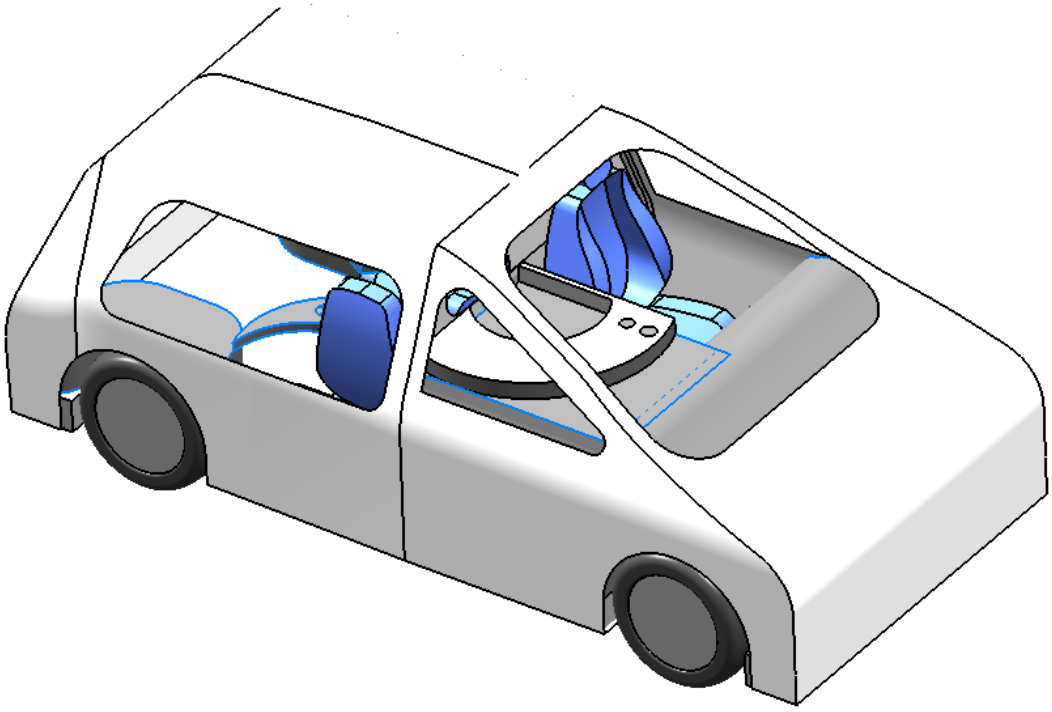

Figure 9.31: Right side without details view.

10. Possible Improvements

In following pages we present some improvements regarding energy. We should take into account that the main problem in electric vehicles is the autonomy and systems which provide energy. There are plentiful researches regarding this topic, nevertheless there are few tangible results. We might not include these in this project owing to objective and definitive results are not corroborated.

10.1. Piezoelectric

Piezoelectric materials are developed recently to convert the kinetic energy of the air in electricity. US researchers are developing a new system with piezoelectric materials which does it. The devices, just two inches thick, would be placed on the roof of our taxi. These are placed on the roof of the taxi to vibrate due to the air flow generated in motion, produce electrical tension. However, the energy generated is not enough to replace the motor, but it is to feed some systems such as batteries or electronic devices like mobile phones. With this improvement we can use the electric boot door, phone chargers, disable people elevator with other applications without having to provide extra energy.

When the device is placed in the wake of a cylinder, like in our case the back of a taxi, the airflow causes a vibration resonance. On the roof of a vehicle, it agitates more unstable due to the turbulent boundary layer. Researchers are now focusing on optimizing the devices, for example change 2.5 by 1.25 inches, moderating the physical forces to which they are subjected in different air currents. These devices open the possibility of continuously recovering energy from the environment using natural resources [4.14]. We should wait until this invent is applied. Nevertheless is important to keep in mind.

Currently there is another developing invention which adds a piezoelectric fibre and photovoltaic fibre simultaneously to take advantage of solar energy.

10.2. Kinetic Energy Recovery System

Mainly with the successful regenerative braking system kinetic energy is converted in electrical energy. As it is obvious, we can obtain many advantages from this application. The obtained electrical energy is stored for future uses in the battery block or capacitor block. One important limitation of this system is that at low speed does not become just as energy. The absorption capacity by the power system depends on the state of charge of the batteries or capacitors; that is their ability to dissipate energy.

It can give a non-regenerative effect because the capacitors or batteries are fully charged, a fact that does not worry really since the period in which this happens is not relevant. Another case that can be given is that another vehicle battery connected to the supply network is not consumed. This is where comes in rheostat brake.

Rheostat brake is used to absorb energy excesses. This electrical energy is dissipated as heat when current circulates during braking. Regenerative braking has the problem that the current generated must be equal to the current supplied, since the current is neither created nor destroyed. They require flywheels to store energy; the disadvantage is that there are problems of overheating.

With this system the electric motor functions as an electric generator during braking and reconnection. Power terminals are conducted to the electrical load from the brakes.

Nowadays we can find this system in many vehicles, such as brand BMW. BMW announces that its Brake Energy Regeneration operates perfectly. Exclusively when the driver applies the brake or takes the foot from the accelerator its generator is activated. “The kinetic energy that would otherwise go to waste is now used efficiently, converted into electricity by the generator and stored in the battery”. [4.15]

In the article regarding Power of Regenerative Braking with Kinetic Energy Recovery System [2.13], we can see more in detail about the influence of speed and Kinetic Energy Recovery System. We have to take into account that is normal to find heavy

traffic on the road for a taxi driver. Owing to the relatively short time braking and discontinued braking, the effective implementation of the Kinetic Energy Recovery System on our taxi is lacked. There is a 15-20% loss of energy of the fuel energy combustion engine; nevertheless this is not our case. There was the necessity of develop methods of kinetic energy recovery to restore the energy loss during the braking. In the research of [2.13] we can observe that its researches are based on variations in speed changes just before braking. To carry out this experimental study, they have been using 1.82kg mass flywheel and generator 12volt voltage, 800watt maximum power. Just before braking, the experiment is done by finding the speed variation characteristics of Kinetic Energy Recovery System; the change of electrical energy is performed to determine that it can be raised. Electrical mechanical Kinetic Energy Recovery System is able to produce an average of 14.07 V, an average current of 5.078 A and an average power electrical energy 71.3 W. “The result shows charging capacity is still small round duration at 3015.5rpm 6.88second produce 95mAh and efficiency of KERS at 1197 rpm 119%, 1816 rpm 75%, 2229 rpm 60% and 2766 rpm 53%” [2.13].

Unlike another improvement, this system is implemented and more developed. That is why, although it is not the aim of this project, the decision whether or not to use this system is taken; will be implemented it in our taxi.

All that measure to collaborate on recharge the batteries will be taken. Every measure that avoids energy consumption will be implemented. Nowadays we could find many studies about improvements and advances in this field, nevertheless we still needs time to consolidate and grants. There are improvements that can be wasteful, but we have to make a study of how long it takes to amortize that will not be discussed in this project. Anyways, we have to take it into account.

10.3. Smart Grid

Regarding recharging stations and power management, many questions come to our head. How does it work? How often should we implement a station? Would it be possible to repair in situ? How can we avoid network overloading? How is the management of electricity in the village?

Since the designed taxi has the same batteries as the VW e-Golf, just a concise research on this to see which method is the best when we need to recharge. One of the options used by VW is public charging stations which work with a power of 3.6 kW. VW e-Golf comes prepared for the Combined Charging System with direct current (DC). In this case, Volkswagen E-Golf recharging takes place in this special charging station with a power of 40 kW. In this way, the battery reaches 80 percent capacity in just 30 minutes.

For this reason is important to know more about ways of optimizing energy and charge stations improvements. With the aim of meeting the varying electricity demands of end-users, smart grid is implemented. That is an electricity network which incorporates a serie of communication, information and other elaborated technologies to monitor the transport of electricity from all generation sources. Its aim is maximizing system reliability and stability at the same time that costs and environmental impacts are minimized. Supporting the establishment of a more energy efficient energy system, this is more secure and more sustainable. There is mutual interest due to both, electrical vehicles and smart grid, could obtain benefits. It would demand major investments devoting energy: the electricity network and charging infrastructure.

In order to minimize the impact on peak electricity demand, the electricity load will be carefully managed. This gets importance since the use of electric vehicles has grown. Consequently, the cost of supply gives the possibility that a large proportion of taxi drivers try to recharge their taxi batteries during the evening. The charge of electric taxis should be scheduled intelligently. So as to save energy, mark down emissions and reduce peak loads; smart-grid technologies have been deployed by electric utilities to obtain better manage commercial load using intelligent measuring and communication systems.

With Smart Grids, at times of peak load, the batteries storage capacity could be enable to be used as a supplementary source of power; during the evening peak, the batteries residual charge could be fed back into the network while the battery is recharged at night. Smart grids include the congregation and exchange of considerable amounts of information in real time at different levels of the supply connection.

Regarding electric vehicle charging infrastructure, this includes physical charging facilities, such as connectors and meters, including programs and smart features for intelligent charging during off-peak periods. As the apportion of electric taxi charging in general electricity load increases, the Smart Grid should need to incorporate other assets to heighten the capacity to provide power-system auxiliary services and, potentially, power discharging hardware and software to enable its batteries to be used as storage devices.

We should take into account that, despite the number of electric taxis is not so high, if the way to charge it is not efficient we could be harmful to electrical system and environment. Normally the charge use to be in the evening, coinciding with the normal daily peak in load. In the case of taxi drivers it should be during the night, when overall system load is much lower. Besides, the impact is higher due to the charges are concentrated in urban areas. To reduce the generation of networks and the necessity of investments, Smart Grid System allows the charge in periods out of peak. In this way, it collaborates to minimise CO2 emissions from electricity generation. Two ways of information flow are provided by a metering system in real time.

Advanced metering equipment is an essential component, enabling a two-way flow of information, providing customers and utilities with real-time. Taxi drivers could administrate the charging time to minimise cost. In this way the taxi driver is all time informed about prices, providing an incentive to keep away from charging at periods of peak load, when prices are highest [2.14].

That improvement is especially important; it is not yet implemented, nevertheless it is even worth doing.

11. Conclusions

Summarizing, with this project the development and design of an electric taxi to resolve certain problems arising in Medellin have been showed. After analyzing the social-economical situation in Medellin, we have concluded that the use of public transportation that pollute less and help the overall economy of the region is necessary. With this alternative Colombian taxi drivers can avoid "Pico y Plata". Throughout the project the advantages compared to the same electric taxi project implemented in Bogotá have been seen.

Because the field of batteries is very extensive, it has not been covered in depth. Nevertheless, there has been an analysis and study of options and alternatives used in other electric vehicles on the market to adapt one to our needs. Given that the best option for now is not yet known on the market, we opted for Lithium batteries. Both the batteries and the electric motor chosen were the same as one that is already on the market so we know that the maximum power is 60 kW with a torque of 210 Nm 130 kilometres per hour; accelerating from 0-100 in 12.4 s.

Analyzing mechanical aspects like suspension, we concluded that the front suspensions will be McPherson while for the rear we chose the double triangle with two articulated and independent arms.

One important aspect was the adaptation for disable people. When the space reserve was designed, every normative was respected and specified. The results were shown graphically by a series of images.

The inside design was detailed with figures obtained from the design done in CATIA, in which it has been observed the details. Some of the most remarkable features of our taxi are: seating distribution, the table system, anti-theft system and backdoor.

Regarding aerodynamics is important to mark that our two door design reduces turbulences and improves the aerodynamic coefficient. We also took into account the effect of the wake when we designed the widths of the vehicle.

The materials chosen, due to its numerous advantages, were Aluminium for the outside and fibreglass for certain parts.

Finally is important to remind some improvements such as the use of piezoelectric materials, Regenerative Braking Systems and the implementation of Smart Grid System.

List of figures and list of tables:

FIGURES:

Figure 3.1: Perception of poverty by zones in Medellín 5

Figure 3.2: Zone for taxis 6

Figure 3.3: Taxis Terminals 7

Figure 3.4: Pico y Plata area.44.42 km^2 of extension 8

Figure 3.5: Electric taxi in Bogotá 10

Figure 4.1: The overpotential of fresh (f) and aged (a) batteries measured 25°C 15

Figure 4.2: Tesla model S. Flat battery 16

Figure 4.3: VW e-Golf batteries 16

Figure 4.4: VW e-Golf interior distribution 17

Figure 4.5: Battery's floor of electrical taxi in Medellín 17

Figure 5.1: VW e-Golf distribution 19

Figure 5.2: Engine space reserve 20

Figure 5.3: Hours/ percent of full charge in SAE J1772 20

Figure 5.4: Lifetime Fiscal and Social Revenues for a "B" Class French ICE and BEV (€ per vehicle) 22

Figure 5.5: Modelled BEV Electricity Consumption for a Compact Car in Germany (kWh/100 km) 23

Figure 6.1: Seats distribution 26

Figure 6.2: Effect of the frequency ratio between the front and rear on the movements of the sprung mass 27

Figure 6.3.a: McPherson 28

Figure 6.3.b: Lower arm triangle 28

Figure 6.4.a: Space reserve front suspension 29

Figure 6.4.b: Assemble 29

Figure 6.5:Double triangle, two articulated and independent arms suspension 29

Figure 6.6.a: Space reserve rear suspension 30

Figure 6.6.b: Assemble 30

Figure 7.1: P 205 / 55 R 16 - 91H 32

Figure 7.2: Real wheel 32

Figure 7.3: 16 x 6.5 in Aluminium 33

Figure 7.4: Axis size 33

Figure 8.1: Area of 1500 mm movement 36

Figure 8.2: Area of 1200 mm movement 36

Figure 8.3: Outline of a passenger in wheelchair 37

Figure 8.4: Distance of scope 37

Figure 8.5: Initial position of seats 39

Figure 8.6: Opening of special boot 39

Figure 8.7: Right seat folded inside the boot 40

Figure 8.8: Left seat in right rails thanks to change of its applicator 40

Figure 8.9: Both seats folded in right rails 41

Figure 8.10: Both seats inside the boot 41

Figure 8.11: Space reserved for wheelchair 42

Figure 8.12: Minimum space for passenger in wheelchair 42

Figure 8.13: Elevator in position 0. Inside the taxi 44

Figure 8.14: Elevator in position 0. Outside the taxi 44

Figure 8.15: Elevator in position 1. Access for wheelchairs 45

Figure 8.16: Elevator in position 2. Maximum Height 45

Figure 8.17: Securing the wheelchair 47

Figure 9.1: Air velocity along streamline passing through ground effect tunnel 49

Figure 9.2: Idealized air pressure distribution around ground effect tunnel 49

Figure 9.3: Width of front part and rear part 50

Figure 9.4: Width of front part and rear part front view 51

Figure 9.5: Properties of candidate materials for car bodies 52

Figure 9.6: Body made of Aluminium 53

Figure 9.7: Windows of polycarbonate 53

Figure 9.8: Taxi driver space global vision 54

Figure 9.9: Compartment taxi driver 55

Figure 9.10: Man percentile 95 56

Figure 9.11: Woman percentile 5 56

Figure 9.12: Distribution in vehicle seating 56

Figure 9.13: Eye positions 57

Figure 9.14: Distribution in vehicle seating 57

Figure 9.15: Customers in distribution 1 58

Figure 9.16: Position 1, tables in position A 59

Figure 9.17: Position 1, tables on 59

Figure 9.18: Position 2, tables Position C 60

Figure 9.19: Position A, Position B and Position C 61

Figure 9.20: Global vision of passenger space 61

Figure 9.21: Volume of boot 62

Figure 9.22: Space of boot 63

Figure 9.23: Opening system 63

Figure 9.24: Opened-closed door 64

Figure 9.25: Lateral view 64

Figure 9.26: Height and length 65

Figure 9.27: Width 65

Figure 9.28: Left side with details view 66

Figure 9.29: Left side without details view 66

Figure 9.30: Right side with details view 67

Figure 9.31: Right side without details view 67

TABLES:

Table 1: Li-ion features 13

Table 2: Iron-Phosphate Battery features 15

Table 3: Resistance values at different temperatures 15

BIBLIOGRAPHY

Books:

[1.1] Pop,V.et al.Battery Management Systems. Accurate State-of-Charge Indication for Battery-Powered Applications. Springer (2008)

[1.2] Reimpell, J. et all. The automotive Chassis: Engineering principles. Arnold. Second German Edition (1995)

[1.3] Smith, C. Engineer to Win. MBI Publishing Company (1984)

[1.4] Smith, C. Racing Chassis and suspension Design. SAE (2004)

[1.5] Ashby, M. Jones, R. Engineering Materials 1.An introduction to their Properties and Applications. BH. Second Edition (1996)

[1.6] Callister, W. Ciencia e ingeniería de los materiales. Reverté

[1.7] Lehto, M. Human Factors and ergonomics for Engineers. LEA (2008)

[1.8] Bridger, R.S. Introducing to Ergonomics. CRC Press .Third Edition (2009)

Articles, Manuals, Course Notes, Thesis:

[2.1] Niemeier, E. Einführung eines Elektrotaxis als Beitrag zur Lösung städtischer Verkehrsprobleme in Entwicklungs- und Schwellenländern am Beispiel, Medellín - Möglichkeiten und Grenzen. (2015)

[2.2] Nano Letters.” Polymer–Graphene Nanocomposites as Ultrafast-Charge and -Discharge Cathodes for Rechargeable Lithium Batteries” (21/09/2014) http://pubs.acs.org/doi/abs/10.1021/nl2039666

[2.3] Nano Energy. A graphene foam electrode with high sulfur loading for flexible and high energy Li-S batteries. Volume 11 (21/09/2014)

http://www.sciencedirect.com/science/article/pii/S2211285514002304

[2.4] Philippe, C. Electric vehicles revisited-cost, subsides and prospects. International Transport Forum (2012-2013)

[2.5] Prud´Homme, R.Electric vehicles: a tentative economic and environmental evaluation. International Transport Forum (2010)

[2.6] Sobejano Landivar, J. Design and development of a belted transmission for an electric car. (2013)

[2.7] López Ramón y Cajal, J. A. Suspensión. Automóviles

[2.8] Chávez, A. Martínez Mira, S. Estudio del acero utilizado en un barra estabilizadora automotriz. (2008)

[2.9] Transport for people with mobility handicaps policy and achievements in Europe (1991)

[2.10] Accesibilidad al medio físico y al transporte. Universidad Nacional de Colombia.

[2.11] Ancra (05/1/2005)

[2.12] Estrada, M. Parámetros antropométricos de la población laboral colombiana (1995)

[2.13] Ramadhan, M.R. Power of Regenerative Braking with Kinetic Energy Recovery System

[2.14] Morgan, T. Smart Grids and Electric Vehicles: Made for Each Other? International Transport Forum. 2012

Regulations:

[3.1] Alcaldía de Medellín. Decreto número 53 de 2015. Medellín (2015)

[3.2] Triviño Devia E. Secretaría de tránsito y transporte. MT-1350-2-19794 del 13 de mayo de 2005 (2005)

[3.3] Arrieta Sanabria, V. Ministerio de transporte.RM MT 59649 del 21 de octubre de 2004 (2004)

[3.4] Decreto 2150 de 1995, “Por la cual se suprimen y reforman regulaciones, procedimientos o trámites innecesarios, existentes en la Administración Pública” (1995)

[3.5] UNE–ISO 2631-1. Vibraciones y choques mecánicos. Evaluación de la exposición humana a las vibraciones de cuerpo entero

[3.6] Ley Estatuaria 1618 „Por medio de la cual se establecen las disposiciones para garantizar el pleno ejercicio de los derechos de las personas con discapacidad“ (2013)

[3.7]NTC 6047. Accesibilidad la medio físico. Espacios de servicio al ciudadano en la administración pública. Requisitos (2013-12-11)

[3.8] UNE 26494. Vehículos de carretera. Vehículos para el transporte de personas con movilidad reducida (2014)

[3.9] Directiva 2001/85/ce del parlamento europeo y del consejo de 20 de noviembre de 2001 (2011)

Web pages:

[4.1] Medellín como vamos. (03/02/2015)

http://www.medellincomovamos.org/pobreza-y-desigualdad

[4.2] Medellín portal de la ciudad. (04/02/2015)

http://www.medellin.gov.co/transito/taxis.html

[4.3] BYD (19/09/2014)

http://www.byd.com/na/auto/e6.html

[4.4] Eco Inteligencia (19/09/2014)

http://www.ecointeligencia.com/2014/04/taxi-electrico-bogota/

[4.5] Faam (21/09/2014)

http://www.faam.com/es/litio/

[4.6] Hipertextual (05/02/2015)

http://hipertextual.com/2014/10/baterias-litio-azufre

[4.7] BYD (5/02/2015)

https://drive.google.com/file/d/0BzQ4g16cW6CqN1E0ZkFXa05xRVU/edit?pli=1

[4.8] Tesla motors (12/01/2015)

www.teslamotors.com

[4.9] Enipedia (15/01/2015)

http://enipedia.tudelft.nl/wiki/VW_e-Golf

[4.10] Green car congress (12/01/2015)

http://www.greencarcongress.com/2014/07/20140721-egolf.html

[4.11] Endesa (09/02/2015)

http://www.endesaeduca.com/Endesa_educa/

[4.12]Volkswagen (09/02/2015)

http://www.vw.com/content/dam/vwcom/brochures/2015models/MY15_e-Golf_Digital.pdf

[4.13] It Cannon (09/02/2015)

http://www.ittcannon.com/Core/medialibrary/ITTCannon/website/Literature/Catalogs-Brochures/RZ_J1772_low_res.pdf?ext=.pdf

[4.14] Ecoticias (18/02/2015)

http://www.ecoticias.com/energias-renovables/95659/Sistema-obtener-energia-aire-partir-vehiculos-movimiento

[4.15] BMW web page (18/02/2015)
Http://www.bmw.com/com/en/insights/technology/technology_guide/articles/mm_brake_energy_regeneration.html

[4.16] Goodyear (10/02/2015)

http://www.goodyear.eu/home_en/landing-page.jsp